Jefferson County

Subdivision
And
Development Regulations

TABLE OF CONTENTS

Section 1 Definitions

Section 2 General Subdivision Requirements

Section 3 Exemptions

Section 4 Preliminary Plat

Section 5 Final Plat

Section 6 Street Design and Construction

Section 7 Acceptance of Road Maintenance and Construction Security

Section 8 Water and Wastewater Standards

Section 9 Drainage and Flood Control

Section 10 Revision and Cancellation

Section 11 Private Road Subdivisions

Section 12 Variances

Section 13 Enforcement and Penalties

Section 14 Severability

Appendix 1-Standard Plat Notes and Certifications

Appendix 2 Standard Forms for Construction Security and Maintenance Security

Appendix 3 Sample Form for Water and Wastewater Service Agreement

Appendix 4 Sample OSSF (On Site Sewage Facility) Chart for Plats

Appendix 5 Jefferson County Flood Damage Prevention Ordinance

Appendix 6 Minimum Standards for Roadway Widths, Shoulders and Ditches

Resolution

STATE OF TEXAS § COMMISSIONERS' COURT
§
COUNTY OF JEFFERSON OF JEFFERSON COUNTY, TEXAS

BE IT REMEMBERED at a meeting of Commissioners' Court of Jefferson County, Texas, held on the 4th day of October, 2010, on motion made by Mark L. Domingue, Commissioner of Precinct No. 2, and seconded by Eddie Arnold, Commissioner of Precinct No. 1, the following Resolution was adopted:

JEFFERSON COUNTY SUBDIVISION AND DEVELOPMENT REGULATIONS

WHEREAS, the Jefferson County Commissioners' Court previously adopted, by Order, Rules, Regulations and Requirements Relating to the Approval and Acceptance of Improvements in Subdivisions or Re-subdivisions in order to provide a framework for the orderly and efficient development of rural and suburban Jefferson County; and

WHEREAS, the Commissioners' Court of Jefferson County has the authority to regulate the subdivision process pursuant to Local Government Code, Sec. 232.001 et seq.; and

WHEREAS, the Commissioners' Court of Jefferson County has been designated by the Texas Commission on Environmental Quality as the authorized agent for the licensing and regulation of on-site sewerage facilities within Jefferson County and these Regulations are a necessary component of such regulation; and

WHEREAS, the Commissioners' Court of Jefferson County has the authority and obligation to exercise general control over the roads, highways, bridges and related drainage structures and development within Jefferson County; and

WHEREAS, the Commissioners' Court of Jefferson County has the authority and obligation to protect the public health, safety, morals or general welfare of the citizens of Jefferson County as provided in Chapter 232.101, Texas Local Government Code; and

WHEREAS, the Jefferson County has the authority to insure that the health and safety of its citizens by assuring that an adequate supply of safe drinking water and safe sewer facilities are available to residential areas by incorporating the provisions of Chapter 364, Model Subdivision Rules into Subdivision Regulations of Jefferson County; and

WHEREAS, the **Jefferson County Subdivision and Development Regulations** are enacted to implement the powers conveyed to counties under the laws of the State of Texas;

WHEREAS, the Commissioners' Court of Jefferson has considered the potential burden on landowners and taxpayers if substandard development or poor quality construction were allowed and these **Jefferson County Subdivision and Development Regulations** are to be enacted to preserve and protect the resources, public health and private property interests of Jefferson County.

NOW THEREFORE, BE IT RESOLVED that the Commissioners' Court of Jefferson County does hereby ORDER the adoption of the **Jefferson County Subdivision and Development Regulations** will supersede and replace the previously adopted Rules, Regulations, and Requirements Relating to the Approval and Acceptance of Improvements in Subdivisions or Re-subdivisions.

SIGNED this 4th day of October, 2010.

JUDGE RONALD WALKER
County Judge

COMMISSIONER EDDIE ARNOLD
Precinct No. 1

Absent
COMMISSIONER MICHAEL S. SINEGAL
Precinct No. 3

COMMISSIONER MARK L. DOMINGUE
Precinct No. 2

Absent
COMMISSIONER EVERETTE D. ALFRED
Precinet No. 4

AMENDMENTS

Amendment No. 1 – 10-18-2010:

Added section 8.11 (b) and (c)
Amended the wordage in the Surety Bond and the Irrevocable Letter of Credit in Appendix 3 to read as: "to provide for the construction and completion of the street, drainage, water and sewer improvements..."

SECTION 1 DEFINITIONS

All capitalized terms used in these Regulations shall have the meaning ascribed to them in this Section, unless no definition is found in this Section, in which case the meaning should be drawn by the context and common English usage.

1.1 Applicant – An Owner or authorized representative seeking approval of a proposed Subdivision pursuant to these Regulations.

1.2 Checklist, Preliminary Plat – An itemization of requirements that must be met for Preliminary Plat review. These requirements are more fully outlined in Article 4.

1.3 Checklist, Final Plat – An itemization of requirements that must be met for the Final Plat review. These requirements are more fully outlined in Article 5.

1.4 **Commissioners Court** – The Commissioners Court of Jefferson County.

1.5 County – Jefferson County, Texas

1.6 County Road System – That system of roads, streets, etc which Jefferson County maintains and that are open to public use.

1.7 County Clerk – The County Clerk of Jefferson County.

1.8 Designated Agent – A County employee, County department, or outside consultant designated to perform certain duties laid out in the Subdivision and Development Regulations.

1.9 Flag Lot – A Flag Lot is a Lot designed to provide a minimum avenue of road access while allowing other Lots to be stacked around it, so that the result is a Lot which is often shaped something like a flag, with a "flag pole" of access stretching out to the nearest road – and other "flag poles" adjacent, leading to more "flag lots". As provided for in Chapter 251 of the Texas transportation Code and in other state laws the County has the general authority and responsibility for road and drainage maintenance and safety. Minimum driveway spacing is one critical component of both public safety and effective road and drainage maintenance where County equipment must operate in barrow ditches or along rural road shoulders. The Texas Association of Counties, working with professional engineers and planners, has reported on the problems created by Flag Lots in many counties in Texas – problems related to inadequate road and driveway access, shoulder maintenance, drainage maintenance, addressing, the delivery of emergency services, school bus routing, and the preservation of adequate sight distance for public safety. Therefore, Flag Lots shall generally not be permitted, except if approved by the Commissioners Court as consistent with the intent and spirit of these Regulations. The Precinct Commissioner or Designated Agent shall advise the Commissioners Court if a proposed Lot constitutes a "Flag Lot" and the Commissioners Court shall, in reviewing all the circumstances, make the final determination as part of the Subdivision process.

1.10 Final Plat – A map of a proposed Subdivision of land prepared in a form suitable for filing of record with all necessary survey drawings, notes, information, affidavits, dedications and acceptances as required by these Regulations.

1.11 Finished Floor Elevation – One foot above the elevation shown on the Flood Insurance Rate Map that indicates the water surface elevation resulting from a flood that has a one (1) percent chance of equaling or exceeding that level in any given year.

1.12 Lot – Any tract to be created by the division of the Original Tract pursuant to the proposed Subdivision application, including the remainder of the Original Tract.w

1.13 NGVD 83 Datum – National Geodetic Vertical Datum dated 1983.

1.14 Original Tract – The parcel of land owned by an Owner prior to the proposed subdivision of this parcel.

1.15 Owner – Any person(s), group(s), firm(s), corporation(s) or any other legal entity having legal title to or sufficient proprietary interest in the land sought to be subdivided under these regulations.

1.16 Private Road Subdivision – A subdivision whose roads, drainage, etc are private, not within the Jefferson County Road System and therefore not maintained by Jefferson County or open to the Public.

1.17 Precinct Commissioner – The elected County Commissioner in whose precinct the Subdivision or development project is proposed.

1.18 Permitted Street – A Street that meets the requirements of Jefferson County under these Regulations.

1.19 Preliminary Plat – A map of proposed Subdivision of land showing the general dimensions and boundaries of each Lot, Topography, Floodplain, the layout of proposed streets, drainage improvements, utility infrastructure, any easements, and other information required by these Regulations. The Preliminary Plat shall show the entire tract of land being proposed for development, including contiguous land owned by the same party, even when the project is planned for multiple phase development.

1.20 Public Road Subdivision - A subdivision whose roads, drainage, etc are after an approved 1 year maintenance period, are accepted into the Jefferson County Road System and therefore maintained by Jefferson County and open to the Public.

1.21Record Plat – A Final Plat that has been approved by the Commissioners Court and is prepared by the Applicant for recordation in the Plat Records of Jefferson County.

1.22 Rules – The Jefferson County Subdivision and Development Rules.

1.23 Serve – To provide a formal copy or application, such as a proposed Subdivision plat or Subdivision Application, and to obtain a receipt for its delivery. For example, a completed copy of the Preliminary Checklist must be served to the County Engineer and the Precinct Commissioner.

1.24 State Plane Coordinate – Coordinate system designed for specific regions of the United States. For Jefferson County the state plane coordinate system is: Texas South Central, FIPSZone 4204, NAD83

1.25 Subdivision – The division of land located within Jefferson County outside the corporate limits of a municipality into two or more parcels to lay out: (1) a subdivision of the tract, including an addition; (2) lots; or (3) streets, alleys, squares, parks, or other parts of the tract intended to be dedicated to public use or for the use of purchasers or owners of lots fronting on or adjacent to the streets, alleys, squares, parks, or other parts. Subdivision of a tract includes a division regardless of whether it is made by using a metes and bounds description in a deed of conveyance or in a contract for deed, by using a contract for sale or other executory contract to convey, or by using any other method. Because County review of subdivision and development activity can be important to many aspects of public health and safety – such as drainage and flood control, 9-1-1 addressing, septic tank sizing and road planning, among others – it is the intent of the Commissioners Court of Jefferson County that the term "subdivision" be interpreted to include all divisions of land to the fullest extent permitted under the laws of the State of Texas, except where specific exceptions may be noted in these rules.

SECTION 2 GENERAL SUBDIVISION REQUIREMENTS

2.1 General Requirements. Any Applicant, who subdivides a tract of land into two or more parts that results in the creation of two or more parts intended for residential purposes or the re-subdivision of a subdivision which does the same, constitutes a subdivision and shall comply in all respects with these Regulations. Any subdivision with parts five (5) acres or less are presumed to be for residential purposes unless the land is restricted to non-residential use on the final plat and in all deeds and contracts for deed; and

2.1.1 Prepare and submit to the County Engineer and Precinct Commissioner a Plat and construction plans for approval of the proposed Subdivision in accordance with the terms and procedures set forth in these regulations

2.2 Subdivision Approval Process. No Subdivision shall be permitted until the Applicant has satisfied each of the following steps in the order indicated:

2.2.1 Submitted a completed Preliminary Plat and construction plans with the County Engineer and Precinct Commissioner.

2.2.2 Obtained approval of Preliminary Plat by the County Engineer and Precinct Commissioner.

2.2.3 Obtained approval of Final Plat and construction plans by the Commissioners Court.

2.2.4 Filing of Record Plat with the County Clerk, to be recorded in the Plat Records of the County.

2.3 Transmittal Materials. All submittals pursuant to these Regulations, including amendments or supplemental materials, shall be delivered to the County Engineer's office and Precinct Commissioner and shall be accompanied by a letter of transmittal indicating:

2.3.1 The name, address and phone number of the Owner and, if different, the developer or applicant.

2.3.2 The name, address and phone number of any person submitting the materials on behalf of the owner.

2.3.3 The name of the proposed Subdivision.

2.3.4 The size and location of the Original Tract; and

2.3.5 A detailed description of the proposed subdivision along with a request for review.

2.4 Communication with Precinct Commissioner. The Applicant is strongly recommended to contact the Precinct Commissioner prior to the submittal of the Preliminary Plat and construction plans.

2.5 Application Materials. Each application for Preliminary Plat or Final Plat shall include the following:

2.5.1 24" X 36" formatted electronic copies (PDF) of the Preliminary plat and all construction plans labeled "Preliminary – For Review Purposes Only";

2.5.2 One (1) black or blue line copy of a full set of subdivision construction plans and one (1) Preliminary Plat to be stamped with date and time of submittal by the Engineering Department secretary;

2.5.3 A tax certificate showing that all taxes currently due with respect to the Original Tract have been paid,

2.5.4 A letter from the Jefferson County 911 – Southeast Texas Regional Planning Commission approving the proposed street names on the plat,

2.5.5 A complete list of and required letters from public utility providers,

2.5.6 All other documents or reports required pursuant to these Regulations.

2.5.7 The applicable application fee, (Allowed by Local Government Code 232.0021 Chapter "A") Set out in Section 2.8

2.6 Record Plat. One (1) 24" X 36" photographic mylar of the approved Final Plat with any revisions required by the Commissioners Court shall be presented to the County Clerk for recording as the Record Plat. All text on the Record Plat must be no smaller than 0.09" in height for legibility.

2.7 Application Review Periods. The County will meet the review deadlines established by Chapter 232.0025 of the Texas Local Government Code

2.8 Application Fees. Upon submitting the Application materials outlined in Section 2.5, the Applicant shall pay a plat application fee in the amount of $250 plus $20 per Lot for the first 100 Lots and $10 per Lot for each Lot over 100 Lots;

2.9 Subdivision within ETJ of a City. Whenever an Original Tract lies within the extraterritorial jurisdiction of an incorporated city, it may be subject to the rules of both the City and the County. Jefferson County will seek to work with cities to coordinate subdivision and land development requirements to make this process as manageable as possible. Applicants should contact the city or the County Engineering Department to determine which set of rules and approval procedures apply to them, but generally the Applicant should obtain approval of the municipality before obtaining final review by the County. As required by the Texas Property Code, the County Clerk may not record a plat unless approved by proper regulatory authority. In the event the land is subject to both city subdivision regulations and these subdivision regulations then the stricter standard shall apply and may be enforced by the city, the County or both. The Applicant bears the burden of establishing to the County Engineer and Precinct Commissioner that no city subdivision approval is required.

2.10 Wastewater and Development Permits. The County shall issue no On-Site Sewage Facility permit on any parcel of land subdivided unless that property has been properly subdivided in accordance with these Regulations or is exempt from platting under state law.

2.11 Submittal to Other Jurisdictions. A copy of the Preliminary Plat with appropriate supporting information will be submitted to all jurisdictions and/or utility providers in addition to Jefferson County that have jurisdiction over or that will provide water, sewer, or electric service to the subdivision. A letter indicating approval of the subdivision components of direct concern to these entities will be required prior to approval of the Preliminary Plat by Jefferson County Commissioners.

SECTION 3 EXEMPTIONS

3.1 Exempted Subdivisions. The following Subdivision shall be exempt from Section 2.2 and shall not be required to obtain plat approval under these Regulations:

3.1.1 The land is used primarily for agricultural use, as defined by Section 1-d, Article VII, Texas Constitution, or for farm, ranch, wildlife management, or timber production use within the meaning of Section 1-d-1, Article VIII, Texas Constitution and not laying out a street.

3.1.2 The land is being divided among close family members and no more than four lots are being created for these family members. To qualify for the exemption, all of these lots must have adequate existing road frontage, with no new streets, parks, alleys or any other parts of the tract intended to be dedicated to public use. Generally, to be considered having adequate road frontage to guarantee safe driveway spacing, sight distance, and reasonable maintenance of road and drainage areas, each Lot must have a least 60 feet (60') of frontage. The County relies on the state's definition of what is close family under the exemption clause provided in the state law that governs county subdivision authority. Thus, close family is defined as a family member related within the third degree of consanguinity or affinity, in accordance with the Government Code, Chapter 573.023 (c); an individual's relatives within the third degree by consanguinity are the individual's:

(a) Parent or child (relatives in the first degree);

(b) Brother, sister, grandparent, or grandchild (relatives in the second degree); and

(c) Great-grandparent, great-grandchild, aunt who is a sister of a parent of the
individual, uncle who is a brother of a parent of the individual, nephew who is a child of a brother or sister of the individual, or niece who is a child of a brother or sister of the individual (relatives in the third degree).

In accordance with the Government Code, Chapter 573.025 (b), an individual's relatives within the third degree by affinity are the individual's:

(a) Anyone related by consanguinity to the individual's spouse in one of the ways named in Chapter 573.023 (c); and

(b) The spouse of anyone related to the individual by consanguinity in one of the ways named on Chapter 573.023 (c).

3.1.3 Any division of land in which all the Lots of the Subdivisions are more than ten acres in area, and the Applicant does not lay out streets, alleys, squares, parks, or other parts of the tract for public or private use. To qualify for the exemption, each Lot must have direct physical access onto an existing public street or road, with adequate minimum Lot frontage to guarantee safe driveway spacing, sight distance, and reasonable maintenance of road and drainage areas. This minimum Lot frontage is generally considered to be at least 60 linear feet.

3.1.4 Any division of land in which all the Lots of the Subdivision are sold to Veterans through the Veteran's Land Board Association; and no streets, alleys, squares, parks, or other parts of the tract are intended for public or private use. To qualify, each Lot must have direct physical access onto an existing public street or road,

with adequate minimum Lot frontage to guarantee safe driveway spacing, sight distance, and reasonable maintenance of road and drainage areas. This minimum Lot frontage shall conform to minimum driveway spacing as set out by Table 2.5.1 Summary of Jefferson County Road Standards.

3.1.5 The State of Texas or any state agency, board, or commission of Land owned by the permanent school fund or any other dedicated funds of the state shall be exempt unless laying out streets, alleys, squares, parks, or other parts of the tract intended to be dedicated to public use or for the use of purchasers or owners of Lots fronting on or adjacent to the streets, alleys, squares, parks, or other parts.

3.1.6 The owner of the tract of land is a political subdivision of the state, the land is situated in a floodplain, and the Lots are sold to adjoining landowners.

3.1.7 The Applicant is creating two tracts, one to be retained by the owner and the other to be transferred to another person who will further subdivide that tract subject to the plat approval requirements of these Regulations. To qualify for this exemption, the Applicant may not lay out streets, alleys, squares, parks or other parts of the tract intended to be for the use of the public or the common use of Lot or tract owners.

3.1.8 The Applicant does not lay out streets, alleys, squares, parks, or other parts of the tract intended to be dedicated to public use or for the use of purchasers or owners of Lots fronting on or adjacent to the streets, alleys, squares, parks, or other parts, and all parts are transferred to persons who owned an undivided interest in the original tract and a plat is filed before any further development of any part of the tract.

SECTION 4 PRELIMINARY PLAT

4.1 Information

One (1) black or blue line copy of the plat is required for submission as specified. The Commissioner's Court will act on the Preliminary Plat within sixty-days (60) from the date the complete application is accepted by the County Engineer. The County will notify applicants within ten (10) business days of the filing if the Preliminary Plat application is flawed or incomplete, in which case applicants must reapply. Proposed Preliminary Plats shall include the following:

4.1.1 General Information.

(a) Name of the proposed Subdivision, which shall not be the same or substantially similar to any other Subdivision within the County unless the Subdivision is an extension of a pre-existing, contiguous Subdivision.

(b) The boundary lines and total acreage of the Original Tract and the Subdivision.

(c) A note stating:

1. The total number of Lots within the proposed Subdivision.

2. The minimum size of Lots

3. That no more than one (1) single family residence shall be located on each lot. This restriction shall also be placed on all deeds and contracts for deed for any Lot sold within the subdivision.

(d) Lot number and size, block numbers, building set back lines.

1. Lot size – minimum fifty foot width, 130 foot depth.

2. Minimum twenty-five foot set back line.

3. Subdivision with curb and gutter streets with storm sewers may use zero lot line design with forty-five (45) foot width lots and one hundred ten (110) foot depth.

4. Length of block shall not exceed 1400 feet.

5. Acreage and dimensions of each Lot, accurate to one-hundredth of an acre. When calculating the acreage of any Lot the gross square footage within the Lot shall be used, provided any area within a public right of way shall be excluded.

(e) Alleys utility easements and drainage easements.

1. Minimum alley width shall be twenty (20) feet.

2. Minimum utility easement fifteen (15) feet.

3. Drainage easements shall be of sufficient width to accommodate the size ditch necessary to carry the design capacity of the ditch, plus adequate width for access and maintenance.

(f) A chart similar to the example given in Appendix 5 of the required clear area for an OSSF (On Site Sewage Facility) unless the subdivisions needs are met by a public water treatment facility.

(g) The location and acreage of any proposed parks, squares, greenbelts, schools or other public use facilities.

(h) Names of adjoining Subdivisions or owners of property contiguous to the proposed Subdivision.

(i) Name, address and phone number of the Surveyor and/or Engineer.

(j) Name, address and phone number of the Owner or Applicant if not the Owner.

(k) A vicinity map showing general location of Subdivision in relation to major roads, towns, cities or topographic features.

(l) North arrow, scale and date.

(m) Boundary lines of any incorporated city and the limit of the extraterritorial jurisdiction of any city.

(n) The location of school district boundaries and a statement clearly indicating in which school district(s) the Subdivision is located. In the event any Lot lies within more than one school district, then the plat shall clearly state the number of acres within the Lot that lies within each school district.

(o) The location of all taxing district boundaries and a statement clearly indicating in which district(s) the subdivision is located. In the event any Lot lies within more than one taxing district, then the plat shall clearly state the number of acres within the Lot that lies within each taxing district.

(p) Each sheet must be numbered consecutively, sheet x of y.

(q) Note the usage of each Lot as single family or other.

4.1.2 Floodplain and Drainage Information.

(a) Elevation contours at no less detail than one-foot (1') intervals, based on NGVD 83 datum.

(b) All Special Flood Hazard Areas identified by the most current Flood Insurance Rate Maps published by the Federal Emergency Management Agency.

(c) For each Lot within the 100-year floodplain, sufficient additional contours to identify and delineate the 100-year floodplain and regulatory floodway, if any. If base flood elevations have not already been established, a Registered Professional Engineer shall establish the elevations.

(d) For each Lot within the 100-year floodplain, a finished floor elevation a minimum of one-foot (1') above the 100 Year Flood Plain for the Finished Floor Elevation must be identified on the plat. Development less than one foot (1') above the 100 Year Flood Plain shall be prohibited. A General Note that reads: "Jefferson County requires all construction to have a minimum first floor elevation that is one (1) foot above the BFE (Base Flood Elevation)" shall be placed on the plat.

(e) For each Subdivision within the 100-year floodplain, at least one benchmark showing NGVD 83 datum elevation, latitude, longitude and state plane coordinates.

(f) A drainage plan depicting the anticipated flow of all drainage onto and from the Subdivision and showing all major drainage and topographic features on or adjacent to the property including all water courses, 100-year floodplain boundaries, floodway boundaries, ravines, swales, ditches, bridges, and culverts.

(g) The location and size of all proposed drainage structures, including on-site retention and/or detention ponds and easements and the impact of Lot and street layouts on drainage.

(h) Depiction of all streams, rivers, ponds, lakes, and other surface water features.

4.1.3 Street and Right of Way Information

(a) Street Width – Open Ditches

1. Minimum right of way width of main or arterial streets shall be 80 feet.

2. Minimum right of way width of collector or lateral roads or streets shall be 60 feet.

3. Minimum right of way width of single resident streets not exceeding six hundred (600) feet in length shall be sixty (60) feet ending in a cul-de-sac with a minimum 50 foot radius.

(b) Streets Widths – Curb and Gutter

1. The minimum right of way width of arterial streets shall be eighty (80) feet.

2. The minimum right of way width of collector type streets shall be sixty (60) feet.

3. The minimum right of way width of single family residential type streets shall be sixty (60) feet and not exceed six hundred (600) feet in length ending in a cul-de-sac with a minimum 50 foot radius.

(c) A minimum 10 foot wide utility easement shall be provided adjoining each side of every street R.O.W.

(d) Location, length and right of way widths of all proposed streets and a depiction of how all proposed streets shall connect with previously dedicated, platted or planned streets within the vicinity of the Subdivision.

(e) Location, size and proposed uses of all proposed access easements, if any.

4.1.4 Water, Wastewater and Utilities Information

(a) Designation of the entity supplying each of the following: electric, phone, cable, and gas utilities to Lots, or a statement that such utility is not available.

(b) The location of all proposed utility easements and/or infrastructure, including water well sanitary easements, if applicable.

(c) Designation of the water and sewer utility provider for the Subdivision, and the source of the water intended to serve each Lot within the subdivided area.

(d) Certification that all Lots have been designed in compliance with these Regulations, together with a Facility Planning Report for On-site Sewage as provided for in Chapter 285 of the TCEQ.

4.2 Street Design. A proposed Preliminary Plat shall contain a written certification from a Registered Professional Engineer that the location and dimensions of streets as set forth and laid out on the Preliminary Plat are in accordance with these Regulations.

4.3 Drainage. A proposed Preliminary Plat shall contain a written certification from a Registered Professional Engineer stating that the location and approximate sizes of the drainage structure(s) set forth in the Preliminary Plat are in accordance with the County's Road and Drainage Specifications.

4.4 On-Site Sewage Rules. A proposed Preliminary Plat shall satisfy the requirements of the TCEQ for On-Site Sewage Systems.

4.5 Approval of Preliminary Plat. The Commissioners Court shall approve a Preliminary Plat if it satisfies each of the requirements set forth in Section **4** and all other provisions of these Regulations.

4.6 No Conveyance of Lots. Conveyance of Lots depicted on a Preliminary Plat shall not be permitted until the Final Plat has been approved and the Record Plat filed by the County Clerk except as provided by Property Code 212.002(d).

4.7 Expiration. Approval of a Preliminary Plat shall expire and be of no further force and effect in the event a Final Plat for a portion of the Subdivision is not filed within twelve (6) months following the date of the Commissioners Court approval of the Preliminary Plat.

SECTION 5 FINAL PLAT

5.0 Application Fee
No fee is required when submitting the Final Plat.

5.1 Information.
A mylar of the final plat is required for submission as specified. The Commissioners Court will act on the Final Plat within sixty (60) days from the date the completed application is filed with the Engineering Department. The County will notify applicants in writing within ten (10) business days of the filing if the application is flawed or incomplete, in which case applicants must file a new, completed Final Plat. Proposed Final Plats shall comply with the requirements of the approved Preliminary Plat and shall include the following:

5.1.1 General Information

(a) Bearings and dimensions of the boundary of the Subdivision and all Lots, streets, parks, greenbelts, easements, or reserves. Dimensions shall be shown to the nearest one-hundredth of a foot (0.01') and bearings shall be shown to the nearest one second of angle (01"). The length of the radius and arc length of all curves, with bearings and distances of all chords, shall be clearly indicated.

(b) Description of monumentation used to mark all boundary, Lot and block corners, and all points of curvature and tangency on street rights-of-way.

(c) Location of original survey line. The Subdivision shall be located with respect to an original corner of the original survey of which it is part.

(d) Lot and block numbers for each Lot.

(e) Acreage of all Lots, calculated to the nearest one-hundredth of an acre.

(f) Each sheet must be numbered consecutively, sheet x of y.

(g) A vicinity map showing general location of Subdivision in relation to major roads, towns, cities or topographic features.

5.1.2 Flood Plain and Drainage Information

(a) For Subdivisions within the 100-year floodplain, one benchmark and finished floor elevations of each Lot in accordance with the Jefferson County Flood Damage Prevention Ordinance.

(b) For each Subdivision within the 100-year floodplain, at least one monument containing latitude, longitude, NVGD 83 elevation and state plane coordinates.

(c) For each Lot within the 100-year floodplain, a minimum one-foot (1') above the floodplain for the Finished Floor Elevation must be provided for on the plat, and development less than one foot (1') above the Finished Floor Elevation shall be prohibited.

5.1.3 Street and Right of Way Information

(a) Total length of all streets, to the nearest one-tenth mile.

(b) Total area of all right-of-way to be dedicated to the public to the nearest hundredth of an acre.

(c) The minimum driveway culvert size for each Lot, as determined in accordance with good engineering and construction practices.

5.1.4 Water, Wastewater and Utilities Information

(a) For each Lot not served by an approved public sewer system, the location of a viable percolation area for septic tanks and proposed well sites, if any.

(b) The following statement should appear prominently on the Final Plat: "No structure in this Subdivision shall be occupied until connected to an individual water supply, state-approved water system, or engineered rain water collection system."

(c) The following statement shall appear prominently on the Final Plat: "No structure in this Subdivision shall be occupied until connected to a public sewer system or to an on-site sewage facility that has been approved and permitted by Jefferson County."

(d) A chart similar to the example given in Appendix F of the required clear area for an OSSF (On Site Sewage Facility) unless the subdivisions needs are met by a public water treatment facility.

5.1.5 Other Plat Notes and Certification as referred to in Appendix 1.

5.2 Additional Requirements for Streets.

5.2.1 One (1) blue line or black line copies of the Construction Plans for all streets and drainage improvements within the Subdivision and signage plans for all streets in accordance with these Regulations shall be submitted with the final plat for review and approval.

5.2.2 A certification under the seal of a Texas Registered Professional Engineer that the Construction Plans and pavement designs are in compliance with these Regulations.

5.2.3 The total estimated construction cost of all of the streets and drainage improvements proposed for construction within the Subdivision.

5.2.4 Streets may be constructed after recording the Record Plat. Construction and Maintenance Fiscal Security to be posted per the requirements of Section 7.

5.3 Standard for Approval. The Commissioners Court shall approve a Final Plat for recording as the Record Plat if it satisfies each of the Requirements set forth in these Regulations.

5.4 Construction Plans. When submitting the Final Plat, PDF versions of the Final Plat and all Drainage and Constructions Plans will be presented to the County Engineer and the Precinct Commissioner.

5.5 Approval of a Final Plat. Approval of a Final Plat shall not authorize any construction or Development activities but merely authorize the Applicant to proceed with the Record Plat.

5.6 Record Plat. Upon approval of the Final Plat by Commissioners Court, the Applicant will be notified by the County Engineer that their Final Plat was approved. It is the Responsibility of the Applicant to file the Record Plat. The Record Plat must be recorded within six (6) months of the approval of the Final Plat.

SECTION 6 STREET DESIGN AND CONSTRUCTION

6.1 Permitted Streets. All streets shall be constructed in accordance with these and the most current edition of the Texas Department of Transportation Standard Specifications for Construction and Maintenance of Highways, Streets and Bridges. Streets shall be paved and dedicated to the public in all Public Subdivisions.

6.2 Dedication to Public Any dedication to the public shall be accomplished either by deed conveying a fee simple interest or by a dedication on the plat conveying a perpetual right of way easement in the property to the Public for public use. No dedication shall be effective until the Record Plat is recorded. In no event shall any private Lot extend into a dedicated roadway.

6.3 Design of Public Improvements. All improvements shall be designed and installed so as to provide, to the maximum extent feasible, a logical system of utilities, drainage and streets and to permit continuity of improvements to adjacent properties. The classification and construction standards for all streets shall be determined according to the Road and Drainage Specifications for Jefferson County.

6.4 Flag Lots. As provided for in Chapter 251 of the Texas Transportation Code and in other state laws, the County has the general authority and responsibility for road and drainage maintenance and safety. Minimum driveway spacing is one critical component of both public safety and effective road and drainage maintenance where County equipment must operate in barrow ditches or along rural road shoulders. The Texas Association of Counties, working with professional engineers and planners, has reported on the problems created by Flag Lots in many counties in Texas – problems related to inadequate road and driveway access, shoulder maintenance, drainage maintenance, addressing, the delivery of emergency services, school bus routing, and the preservation of adequate sight distance for public safety. Therefore, Flag Lots shall generally not be permitted, except if approved by the Commissioners Court as consistent with the intent and spirit of these Regulations. The Precinct Commissioner or Designated Agent shall advise the Commissioners Court if a proposed Lot constitutes a "Flag Lot" and the Commissioners Court shall, in reviewing all the circumstances, make the final determination as part of the Subdivision process.

6.5 Residential Driveways. As noted in Section 6.4 above, adequate Lot and driveway spacing is important to road maintenance and safety. In order to ensure public safety on roads with more traffic and higher speeds, and to further minimize – on existing County roads – creation of Flag Lots that might pose a threat to the public safety and welfare, the County imposes minimum lot frontage requirements to ensure adequate driveway spacing for various types of County roads. For the purposes of this Section only, any County road that is not a Neighborhood Subdivision Street is considered a County Feeder Road. Neighborhood Subdivision Streets under this section are considered to be roads created as part of the Subdivision process and intended to service only those Lots within a particular Subdivision, or serving other subdivisions such that the road does not provide service to more than 100 Lots. A Neighborhood Subdivision Street must connect to a state or federal highway, or to a county Feeder Road. A road which connects two subdivisions of greater than 100 Lots, or which provides throughway access to another community or area in the County is not considered a Neighborhood Subdivision Street (and thus is considered a County Feeder Road).

> **6.5.1** Minimum Lot Frontage on County Feeder Road (and recommended frontage for all state roads in the County) – 150 feet. This is a general standard; however, the Commissioners Court may allow more closely spaced Lots, and thus more densely packed driveways, if an Applicant demonstrates to the Commissioners Court that its Subdivision layout is prepared according to generally accepted professional planning and engineering principles, with adequate provisions for safety and infrastructure development. An Applicant requesting minimum Lot frontages of less than 150-foot

standard on a County Feeder must demonstrate to the Commissioners Court how his or her application meets the spirit of Section 6.4, the prohibition on Flag Lots.

6.5.2 Minimum Lot Frontage on Neighborhood Subdivision Streets – 60 feet, or 25 feet at the bulb of a cul-de-sac.

6.6 Permission Required for Construction in Right of Way. No driveway or utility construction, mail boxes, landscaping or any other encroachment into public right-of-way or easements shall be allowed without first obtaining permission from the County.

6.7 Minimum Road Standards. The following are minimum standards to which any road in Jefferson County is to be constructed. As previously stated in section 6.1, all streets are to meet the standards for construction outlined in the most current edition of the Texas Department of Transportation Standard Specifications for Construction and Maintenance of Highways, Streets and Bridges.

6.7.1 The minimum standard design for "Ordinary County Roads", "Arterial Roads", and "Thoroughfare Roads" is 80,000 lbs loading.

6.7.2 The Minimum standard design for "Residential Subdivision Streets" is 65,000 lbs loading.

6.7.3 A pavement design shall be performed utilizing soil tests to determine the existing soil strength. The pavement design shall be performed in accordance with the general typical section guidelines for various roadways as indicated in Appendix 6. The pavement design shall be submitted to the County Engineering Department with the road construction plans, signed and sealed by a registered Professional Engineer for approval.

SECTION 7 ACCEPTANCE OF ROAD MAINTENANCE AND CONSTRUCTION SECURITY

7.1 Applicant's Maintenance Responsibility.
The Applicant shall remain responsible for all maintenance and repair of street and drainage facilities within a subdivision for a minimum of one (1) year after completion of construction to Jefferson County standards. The Applicant shall post with the County a maintenance security in the form of cash, surety bond or irrevocable letter of credit to secure the proper maintenance of the roads prior to County acceptance for maintenance thereof in an amount equal to 20% of the construction costs of the streets for a term of one (1) year following agreement by the County that construction of the improvements required for the subdivision is complete and the improvements are in accordance with the plans and specifications approved for the subdivision. Acceptance of maintenance responsibilities by Jefferson County is further described in subsection 7.3. The decision of the Commissioners Court to approve a Final Plat, the recording of the Record Plat, or dedication of the right of way for a street shall not be deemed to constitute acceptance of the streets for maintenance.

7.2 Construction Security. This section applies if the Applicant desires to file a Final Plat prior to completion of construction of all water, wastewater, streets, and drainage facilities and inspection by the Precinct Commissioner or Designated Agent. The Applicant shall continue to be responsible for all other requirements set forth in Section 7.1 above.

7.2.1 With permission of the Commissioners Court, the Applicant shall post a Construction Security in the form of cash, surety bond, or irrevocable letter of credit in an amount equal to 100% of the estimated construction costs of the streets and roads. The Commissioners Court must individually approve each application to post such Construction Security and the Construction Security shall remain in effect until the streets and roads and all associated drainage improvements have been accepted by the County for maintenance at which time the Applicant shall post a Maintenance Security, pursuant to Section 7.1 above. Sample Construction Security forms are provided in Appendix 2. The County shall be given a sixty day (60) Notice of Cancellation prior to the termination or end of the Security coverage period.

7.2.2 Before release of the Construction Security, the Precinct Commissioner or Designated Agent shall inspect the water, wastewater, roads, and drainage facilities and the Applicant shall remedy all deficiencies. If the deficiencies are not properly remedied, the County shall draw on the security to make the necessary repairs.

7.2.3 Collection on security and the prosecution of construction to complete the improvements to the extent possible with resulting funds is not acceptance of the improvements for maintenance. The County is not a Subdivision developer and, if it undertakes the performance of such construction through a third party contractor, the County is acting as a third party trustee for the public and the contractor shall be liable for all costs incurred by the county in excess of the surety amount, if any.

7.2.4 The Applicant has delivered a letter to the County agreeing to perform the testing and inspections specified in 7.3.3.

7.2.5 Acceptable Forms of Security

(a) Bonds. A bond that is submitted in compliance with subsection (a) of this section shall meet the following requirements.

(1) The bond or financial guarantee shall be payable to the county judge of the county, in his official capacity, or the judge's successor in office.

(2) The bond or financial guarantee shall be in an amount determined by the commissioners court to be adequate to ensure proper construction or installation of the public roads and drainage facilities, the public or non-public water facilities, and wastewater facilities to service the subdivision, including reasonable contingencies, but in no event shall the amount of the bond be less than the total amount needed to serve the subdivision as established by the engineer who certifies the plat.

(3) The bond shall be executed with sureties as may be approved by the commissioners court. The county shall establish criteria for acceptability of the surety companies issuing bonds that include but are not limited to:

(A) registration with the Secretary of State and be authorized to do business in Texas;

(B) authorization to issue bonds in the amount required by the commissioners court; and

(C) rating of at least B from Best's Key Rating Guide; or if the surety company does not have any such rating due to the length of time it has been a surety company, the surety company must demonstrate eligibility to participate in the surety bond guarantee program of the Small Business Administration and must be an approved surety company listed in the current United States Department of Treasury Circular 570. Such bonds shall meet the criteria contained in the rules and regulations promulgated by the United States Department of Treasury.

(4) The bond shall be conditioned upon construction or installation of public roads, drainage facilities, water and wastewater facilities meeting the criteria established by Jefferson County and upon construction of facilities within the time stated on the plat, or on the document attached to the plat for the subdivision, or within any extension of time granted by the commissioners court.

(b) Letter of credit. A letter of credit that is submitted in compliance with subsection (a) of this section shall meet the following requirements.

(1) Any letter of credit submitted as a financial guarantee for combined amounts greater than $10,000 and less than $250,000 must be from financial institutions which meet the following qualifications.

(A) Bank qualifications:

(i) must be federally insured;

(ii) Sheshunoff rating must be 10 or better and primary capital must be at least 6.0% of total assets; and

(iii) total assets must be at least $25 million.

(B) Savings and loan association qualifications:

(i)must be federally insured;

(ii) tangible capital must be at least 1.5% of total assets and total assets must be greater than $25 million or tangible capital must

be at least 3.0% of total assets if total assets are less than $25 million; and

(iii) Sheshunoff rating must be 30 or better.

(C) Other financial institutions qualifications:

(i) the letter of credit must be 110% collateralized by an investment instrument that would meet the qualifications for a county investment; and

(ii) the investment instrument must be registered in the county's name and the county must receive safekeeping receipts for all collateral before the letter of credit is accepted.

(2) Any letter of credit submitted as a financial guarantee for combined amounts greater than $250,000 must be from financial institutions which meet the following qualifications.

(A) Bank qualifications:

(i) must be federally insured;

(ii) Sheshunoff rating must be thirty or better and primary capital must be at least 7.0% of total assets; and

(iii) total assets must be at least $75 million.

(B) Savings and loan association qualifications:

(i) must be federally insured;

(ii) tangible capital must be at least 3.0% of total assets and total assets must be greater than $75 million, or tangible capital must be at least 5.0% of total assets if total assets are less than $75 million; and

(iii) Sheshunoff rating must be 30 or better.

(C) Other financial institutions qualifications:

(i) the letter of credit must be 110% collateralized by an investment instrument that would meet the qualifications for a county investment; and

(ii) the investment instrument must be registered in the county's name and the county must receive safekeeping receipts for all collateral before the letter of credit is accepted.

(3) The letter of credit shall list as sole beneficiary the county judge of the county, in his official capacity, or the judge's successor in office, and must be approved by the county judge of the county. The form of the letter of credit shall be modeled after the form attached in Appendix 2B. Figure: 31 TAC Section 364.54(c)(3)

(4) The letter of credit shall be conditioned upon installation or construction of water and wastewater facilities meeting the criteria established under Division 2 of this subchapter and upon construction of facilities within the time stated on the plat, or on the document attached to the plat for the subdivision, or within any extension of time granted by the commissioners court.

(c) Financial guarantee. The county will determine the amount of the bond, letter of credit, or cash deposit required to ensure proper construction of adequate water and wastewater facilities in the subdivision.

(d) Alternative to county accepting a financial guarantee. The county may approve a final plat under this section without receiving a financial guarantee in the name of the county if:

(1) the property being subdivided lies wholly within the jurisdiction of a municipality;

(2) the property being subdivided lies wholly within the extra-territorial jurisdiction of a municipality; and

(3) the municipality has executed an interlocal agreement with the county that imposes the obligation on the municipality to:

(A) accept the bonds, letters of credit, or other financial guarantees, that meet the requirements of this section;

(B) execute the construction agreement with the subdivider; and

(C) assume the obligations to enforce the terms of the financial guarantee under the conditions set forth therein and complete construction of the facilities identified in the construction agreement.

7.3 County Acceptance of Maintenance
The County shall accept a road or street for maintenance when the conditions stipulated herein have been satisfied:

(a) The roadway sub-base, base and wearing surface treatment(s) have been installed and item 7.3.5 and 7.3.5 (a) requirements have been met; or

(b) The roadway sub-base and base were previously constructed, the surface of the base material was recently refinished and the final wearing surface treatment(s) have been recently installed and item 7.3.6 and 7.3.6 (a) requirements have been met.

7.3.1 The street, drainage structures and right of way has been constructed or completed in accordance with these Regulations, the Record Plat for the road or street has been recorded and the associated right of way has been dedicated to the public pursuant to these Regulations;

7.3.2 The Applicant has submitted a written request to the County. If the Applicant is no longer available, i.e. has ceased to transact any business or, in the case of an individual, has died, any person owning property with frontage or access onto the street may submit the written request.

7.3.3 The Jefferson County Precinct Commissioner or Designated Agent has approved all required inspections and tests at the completion of each phase of construction of the street; including plasticity index for the sub-base and base, tests for compacted density, depth of base and distribution of asphalt. It is the responsibility of the Applicant to

coordinate all inspections and laboratory tests with the Jefferson County Precinct Commissioner or Designated Agent and not to proceed with construction of the next phase of work until proper inspections and tests have been obtained. All laboratory tests, test holes, and required repairs shall be at the expense of the Applicant. In no event will any base be placed on the street until the Precinct Commissioner or Designated Agent has approved the sub-grade.

7.3.4 The Jefferson County Precinct Commissioner or Designated Agent has inspected the street no earlier than thirty (30) days prior to the acceptance for maintenance by Commissioners Court and has submitted to the Commissioners Court an Inspection Report stating that:

(a) The street, in its current condition and with no repairs, upgrades or improvements, appears to be in compliance with the Regulations and all other guidelines in effect at the time of the inspection.

(b) All requirements regarding construction of drainage structures and driveway drain pipes have been satisfied; and

(c) The Precinct Commissioner or Designated Agent recommends acceptance of the street by the Commissioner Court.

7.3.5 The Applicant has posted with the County a maintenance security in the form of cash, surety bond or irrevocable letter of credit to secure the proper maintenance of the roads prior to County acceptance thereof in an amount equal to 20% of the construction costs of the streets for a term of one (1) year following agreement by the County that construction of the improvements required for the subdivision is complete and the improvements are in accordance with the plans and specifications approved for the subdivision. Before release of the Maintenance Security, the Precinct Commissioner or Designated Agent shall again inspect the roads or streets and the Applicant shall remedy all deficiencies prior to release of the Maintenance Security. If the deficiencies are not promptly remedied, the County shall make the repairs or cause the repairs to be made by private contractor(s) and draw on the Maintenance Security for payment. Sample Maintenance Security forms are provided in the Appendix 2.

(a) Warranty: The Paving Contractor shall provide a written warranty, addressed to the County of Jefferson and directed to the Precinct Commissioner following the installation of the roadway wearing surface. Said warranty shall generally cover all failures due to defects in materials, workmanship, or improper installation methods and shall extend for a period of one (1) year from the date of acceptance by the Precinct Commissioner. Said warranty shall specifically cover the delamination of the wearing courses from the flexible base due to improper installation. Jefferson County shall direct the repairs of the deficiencies during the warranty period. Facilities are public facilities and shall not be altered without the permission of the County. Jefferson County shall perform inspections of the facilities, which are in the warranty period once each quarter. The developer or his designated representative shall be offered the opportunity to accompany the County on each quarterly inspection. A written record of any deficiencies shall be provided to the developer. Repair of the deficiencies shall be as directed by the County. Said warranty shall not cover failures due to excessive traffic loads or structural failures of the flexible base or sub-grade.

7.3.6 The Applicant has posted with the County a maintenance security in the form of cash, surety bond or irrevocable letter of credit to secure the proper maintenance of the roads prior to County acceptance thereof in an amount equal to 20% of the construction work completed, and 100% of construction work not completed of the roads for a term of

one (1) year following agreement by the County that construction of the improvements required for the subdivision is complete and the improvements are in accordance with the plans and specifications approved for the subdivision. Before release of the Maintenance Security, the Precinct Commissioner or Designated Agent shall again inspect the roads or streets and the Applicant shall remedy all deficiencies, prepared the surface of the base materials and shall have installed the surface treatment prior to release of the Maintenance Security. If the deficiencies are not promptly remedied, the County shall make the repairs, install the surface treatment, and draw on the Maintenance Security for payment. Sample Maintenance Security forms are provided in the Appendix 2.

(a) Warranty: The Paving Contractor shall provide a written warranty, addressed to the County of Jefferson and directed to the Precinct Commissioner following the installation of the roadway wearing surface. Said warranty shall generally cover all failures due to defects in materials, workmanship, or improper installation methods and shall extend for a period of one (1) year from the date of acceptance by the Precinct Commissioner. Said warranty shall specifically cover the delamination of the wearing courses from the flexible base due to improper installation. Said warranty shall not cover failures due to excess traffic loads or structural failures of the flexible base or sub-grade. Jefferson County shall direct the repairs of the deficiencies during the warranty period. Facilities are public facilities and shall not be altered without the permission of the County. Jefferson County shall perform inspections of the facilities, which are in the warranty period once each quarter. The developer or his designated representative shall be offered the opportunity to accompany the County on each quarterly inspection. A written record of any deficiencies shall be provided to the developer. Repair of the deficiencies shall be as directed by the County.

7.4 Installation of Utility Lines.

All utility lines planned for construction under a paved street shall be installed before the street is paved. All utility lines installed under an existing paved street shall be bored to a point at least four feet beyond the edge of pavement, be a minimum of three feet below the lowest ditch flowline at point of crossing and must be approved in advance by the Commissioners Court.

7.4.1 Because the location of utility lines in County rights-of-way or beneath public streets may affect future road construction, re-construction, and on-going maintenance, the County reserves the right to dictate the reasonable placement of utility lines where those lines encroach upon County rights-of-way or other County property.

(a) Applicants shall consult with the Precinct Commissioner or his/her Designated Agent, who shall determine on a case-by-case basis whether it is appropriate to allow utility placement running parallel beneath a Permitted Street or in a County right-of-way.

(b) If Applicant disagrees with the ruling of the Precinct Commissioner or his/her Designated Agent, Applicant may appeal to the Commissioners Court, which shall make a final ruling by resolution.

(c) As part of the approval process, the Applicant shall make certain that all relevant plat notes and drawings for Final Plat submittal, as well as any construction documents submitted to the County, shall conform to the utility placement dictated by the County.

(d) When allowed, construction on County right-of-way or easements must be on the back slope of the ditch with the following minimum cover:

- Telephone line – 18 inches.
- Gas line – 24 inches.
- Electric line – 48 inches.
- Television cable – 18 inches.
- Water line – 24 inches.

(e) The Precinct Commissioner should be notified 48 hours before utility work is commenced in a County right-of-way or easement.

SECTION 8 WATER AND WASTEWATER STANDARDS

8.0 Definitions.
The following words and terms, when used in this chapter, shall have the following meanings, unless the context clearly indicates otherwise.

(1) Drinking water - All water distributed by any agency or individual, public or private, for the purpose of human consumption, use in the preparation of foods or beverages, cleaning any utensil or article used in the course of preparation or consumption of food or beverages for human beings, human bathing, or clothes washing.

(2) Engineer - A person licensed and authorized to practice engineering in the State of Texas under the Texas Engineering Practice Act.

(3) Non-public water system - Any water system supplying water for domestic purposes which is not a public water system.

(4) OSSF - On-site sewage facilities as that term is defined in rules and/or regulations adopted by TCEQ, including, but not limited to, 30 TAC Chapter 285.

(5) Platted - Recorded with the county in an official plat record.

(6) Public water system - A system for the provision to the public of water for human consumption through pipes or other constructed conveyances, which includes all uses described under the definition for drinking water. Such a system must have at least 15 service connections or serve at least 25 individuals at least 60 days out of the year. This term includes any collection, treatment, storage, and distribution facilities under the control of the operator of such system and used primarily in connection with such system; and any collection or pretreatment storage facilities not under such control which are used primarily in connection with such system. Two or more systems with each having a potential to serve less than 15 connections or less than 25 individuals but owned by the same person, firm, or corporation and located on adjacent land will be considered a public water system when the total potential service connections in the combined systems are 15 or greater or if the total number of individuals served by the combined systems total 25 or more at least 60 days out of the year. Without excluding other meanings of the terms "individual" or "served," an individual shall be deemed to be served by a water system if he lives in, uses as his place of employment, or works in a place to which drinking water is supplied from the system.

(7) Purchaser - Shall include purchasers under executory contracts for conveyance of real property.

(8) Retail public utility - Any entity meeting the definition of a retail public utility as defined in Water Code Section, 13.002.

(9) Sewerage facilities - The devices and systems which transport domestic wastewater from residential property, treat the wastewater, and dispose of the treated water in accordance with the minimum state standards contained or referenced in these rules.

(10) Subdivider - Any owner of land or authorized agent thereof proposing to divide or dividing land so as to constitute a subdivision.

(11) TAC - Texas Administrative Code, as compiled by the Texas Secretary of State.

(12) TCEQ - Texas Commission on Environmental Quality.

(13) Water facilities - Any devices and systems which are used in the supply, collection, development, protection, storage, transmission, treatment, and/or retail distribution of water for safe human use and consumption.

8.1. Scope of Standards.
The establishment of a residential development with two or more lots of five acres or less where the water supply and sewer services do not meet the minimum standards of this division is prohibited. A subdivision with lots of five acres or less is presumed to be a residential development unless the land is restricted to nonresidential use on the final plat and all deeds and contracts for deeds.

8.2 Water Facilities Development.
(a) Public water systems.

(1) Subdividers who propose to supply drinking water by connecting to an existing public water system must provide a written agreement with the retail public utility in substantially the form attached in Appendix 1A. The agreement must provide that the retail public utility has or will have the ability to supply the total flow anticipated from the ultimate development and occupancy of the proposed subdivision for a minimum of 30 years. The agreement must reflect that the subdivider has paid the cost of water meters and other necessary connection equipment, membership fees, water rights acquisition costs, or other fees associated with connection to the public water system so that service is available to each lot upon completion of construction of the water facilities described on the final plat.

(2) Where there is no existing retail public utility to construct and maintain the proposed water facilities, the subdivider shall establish a retail public utility and obtain a Certificate of Convenience and Necessity (CCN) from the TCEQ. The public water system, the water quality and system design, construction and operation shall meet the minimum criteria set forth in 30 TAC Sections 290.38– 290.51 and Sections 290.101-290.120. If groundwater is to be the source of the water supply, the subdivider shall have prepared and provide a copy of a groundwater availability study which shall include an analysis of the long term (30 years) quantity and quality of the available groundwater supplies relative to the ultimate needs of the subdivision. If surface water is the source of supply, the subdivider shall provide evidence that sufficient water rights have been obtained and dedicated, either through acquisition or wholesale water supply agreement, that will provide a sufficient supply to serve the needs of the subdivision for a term of not less than 30 years.

(b) Non-public water systems. Where individual wells or other non-public water systems are proposed for the supply of drinking water to residential establishments, a test well or wells located so as to be representative of the quantity and quality of water generally available from the supplying aquifer shall be drilled by the subdivider and the produced waters sampled and submitted to a private laboratory for a complete chemical and bacteriological analysis of the parameters on which there are drinking water standards. The subdivider shall have prepared and provide a copy of a groundwater availability study which shall include an analysis of the long term (30 years) quantity of the available groundwater supplies relative to the ultimate needs of the subdivision. The water quality of the water produced from the test well must meet the standards of water quality required for community water systems as set forth in 30 TAC Sections 290.103, 290.105, 290.106, and 290.110 either.

(1) without any treatment to the water; or

(2) with treatment by an identified and commercially available water treatment system.

(c) Transportation of potable water. The conveyance of potable water by transport truck or other mobile device to supply the domestic needs of the subdivision is not an acceptable method, except on an emergency basis. Absence of a water system meeting the standards of these rules due to the negligence of the subdivider does not constitute an emergency.

8.3 Wastewater Disposal.
(a) Organized sewerage facilities.

(1) Subdividers who propose the development of an organized wastewater collection and treatment system must obtain a permit to dispose of wastes from the TCEQ in accordance with 30 TAC Chapter 305 and obtain approval of engineering planning materials for such systems under 30 TAC Chapter 317 from the TCEQ.

(2) Subdividers who propose to dispose of wastewater by connecting to an existing permitted facility must provide a written agreement in substantially the form attached in Appendix 1B with the retail public utility. The agreement must provide that the retail public utility has or will have the ability to treat the total flow anticipated from the ultimate development and occupancy of the proposed subdivision for a minimum of 30 years. The agreement must reflect that the subdivider has paid the cost of all fees associated with connection to the wastewater collection and treatment system have been paid so that service is available to each lot upon completion of construction of the wastewater facilities described on the final plat. Engineering plans for the proposed wastewater collection lines must comply with 30 TAC Chapter 317.

(b) On-site sewerage facilities.

(1) On-site facilities which serve single family or multi-family residential dwellings with anticipated wastewater generations of no greater than 5,000 gallons per day must comply with 30 TAC Chapter 285.

(2) Proposals for sewerage facilities for the disposal of sewage in the amount of 5,000 gallons per day or greater must comply with 30 TAC Chapter 317.

(3) The TCEQ or its authorized agent shall review proposals for on-site sewage disposal systems and make inspections of such systems as necessary to assure that the system is in compliance with the Texas Health and Safety Code, Chapter 366 and rules in 30 TAC Chapter 285, and in particular Sections 285.4, 285.5, and 285.30-285.39. In addition to the unsatisfactory on-site disposal systems listed in 30 TAC Section 285.3(b), pit privies and portable toilets are not acceptable waste disposal systems for lots platted under these rules.

(4) Subdividers who propose to dispose of wastewater utilizing on-site sewage disposal systems must provide Jefferson County with all necessary information to assure all lots in the subdivision will meet the State and County requirements for an OSSF. After Jefferson County agrees all lots will meet requirements for an OSSF, no financial surety will be required for wastewater facilities.

8.4 Greywater Systems for Reuse of Treated Wastewater.
(a) Organized or municipal sewerage systems. Any proposal for sewage collection, treatment and disposal which includes greywater reuse shall meet minimum criteria of 30 TAC Chapter 210 promulgated and administered by the TCEQ.

(b) On-site sewerage facilities. Any proposal for on-site sewage disposal which includes provisions for greywater use shall meet the minimum criteria of 30 TAC Chapter 285.

8.5 Sludge Disposal.
The disposal of sludge from water treatment and sewerage facilities shall meet the criteria of 30 TAC Chapter 312 and Chapter 317.

8.6 Setbacks.
In areas that lack a nationally recognized fire code as listed in Local Government Code, Section 235.002(b)(2)and lack water lines sized for fire protection, setbacks from roads and right-of-ways shall be a minimum of 10 feet, setbacks from adjacent property lines shall be a minimum of five feet, and shall not conflict with separation or setback distances required by rules governing public utilities, on-site sewerage facilities, or drinking water supplies. Setback lines required elsewhere in the orders or rules of the county shall control to the extent greater setbacks are therein required.

8.7 Number of Dwellings Per Lot.
No more than one single family detached dwelling shall be located on each lot. A notation of this restriction shall be placed on the face of the final plat. This restriction shall be placed in all deeds and contracts for deeds for real estate sold within the subdivision. Proposals which include multi-family residential shall include adequate, detailed planning materials as required for determination of proper water and wastewater utility type and design.

8.8 Applications for Plat Approval.
(a) Owner representation. An application for approval of a plat shall be filed with the county by the record owner of the property to be subdivided or the duly authorized agent of the record owner.

(b) Standards. Every plat creating two or more lots of five acres or less for residential use shall comply with the standards of Section 8.0 through 8.7 and the requirements of Sections 8.8 through 8.14 of this subchapter.

8.9 Final Engineering Report.
The final plat shall be accompanied by an engineering report bearing the signed and dated seal of a professional engineer registered in the State of Texas. The engineering report shall discuss the availability and methodology of providing water facilities and wastewater treatment to individual lots within the subdivision. A detailed cost estimate per lot acceptable to the county shall be provided for those unconstructed water supply and distribution facilities and wastewater collection and treatment facilities which are necessary to serve each lot of the subdivision. The plan shall include a construction schedule for each significant element needed to provide adequate water or wastewater facilities. If financial guarantees are to be provided, the schedule shall include the start dates and completion dates.

(1) Public water systems.

(A) Where water supplies are to be provided by an existing public water system, the subdivider shall furnish an executed contractual agreement between the subdivider and the retail public utility in substantially the form attached in Appendix 3A. Before final plat approval, plans and specifications for the proposed water facilities shall have been approved by all entities having jurisdiction over the proposed project which may include in addition to the county the TCEQ and the county health department. If groundwater is to be the source of the water supply, the final engineering report shall include a groundwater availability study which shall include comments regarding the long term (30 years) quantity and quality of the available groundwater supplies relative to the ultimate needs of the subdivision.

(B) Where there is no existing retail public utility to construct and maintain the proposed water facilities, the subdivider shall establish a retail public utility and obtain a Certificate of Convenience and Necessity (CCN) from the TCEQ and include evidence of the CCN issuance with the plat. Before final plat approval, plans and specifications for the

proposed water facilities shall have been approved by all entities having jurisdiction over the proposed project. If groundwater is to be the source of the water supply, the final engineering report shall include a groundwater availability study which shall include an analysis of the long term (30 years) quantity and quality of the available groundwater supplies relative to the ultimate needs of the subdivision. If surface water is the source of supply then the final engineering report shall include evidence that sufficient water rights have been obtained and dedicated, either through acquisition or wholesale water supply agreement, that will provide a sufficient supply to serve the needs of the subdivision for a term of not less than 30 years.

(2) Non-public water systems.

Where individual wells are proposed for the supply of drinking water to residences, the final engineering report shall include the quantitative and qualitative results of sampling the test wells in accordance with Section 8.9 of this title. The results of such analyses shall be made available to the prospective property owners. If the water quality of the test well does not meet the water quality standards as set forth without treatment by an identified and commercially available water treatment system, then the final report must state the type of treatment system that will treat the water produced from the well to the specified water quality standards, the location of at least one commercial establishment within the county at which the system is available for purchase, and the cost of such system, the cost of installation of the system, and the estimated monthly maintenance cost of the treatment system. The engineer shall issue a statement concerning the availability of groundwater supplies to serve the fully developed subdivision over the next 30 years. Such statement may be based on information available from the Texas Water Development Board's Office of Planning. The description of the required sanitary control easement shall be included.

(3) Organized sewerage facilities.

(A) Where wastewater treatment is to be provided by an existing retail public utility, the subdivider shall furnish evidence of a contractual agreement between the subdivider and the retail public utility in substantially the form attached in Appendix 3B. Before final plat approval, an appropriate permit to dispose of wastes shall have been obtained from the TCEQ and plans and specifications for the proposed wastewater collection and treatment facilities shall have been approved by all entities having jurisdiction over the proposed project.

(B) Where there is no existing retail public utility to construct and maintain the proposed sewerage facilities, the subdivider shall establish a retail public utility and obtain a CCN from the TCEQ. Before final plat approval, a wastewater treatment permit authorizing the treatment of the wastewater for the ultimate build-out population of the subdivision shall have been obtained from the TCEQ and plans and specifications for the proposed sewerage facilities shall have been approved by all entities having jurisdiction over the proposed project.

(4) On-site sewerage facilities. Where private on-site sewerage facilities are proposed, the final engineering report shall include planning materials required by 30 TAC Section 285.4(c), including the site evaluation described by 30 TAC Section 285.30 and all other information required by the county's OSSF requirements.

8.10 Additional Information.
The county may, at its option, require additional information necessary to determine the adequacy of proposed water and wastewater improvements as part of the plat approval process.

8.11 Financial Guarantees for Improvements.

(a) Applicability. If an adequate public or non-public water system or sewerage facility is not available from a retail public utility, or are not constructed by the subdivider, to serve lots intended for residential purposes of five acres or less at the time final plat approval is sought, then the commissioners court shall require the owner of the subdivided tract to execute an agreement with the county in substantially the form attached in Appendix 2 secured by a bond, irrevocable letter of credit, or other alternative financial guarantee such as a cash deposit which meet the requirements set forth below.

(b) The bond or financial guarantee shall be in an amount determined by the commissioners court to be adequate to ensure proper construction or installation of the public or non-public water facilities, and wastewater facilities to service the subdivision, including reasonable contingencies, but in no event shall the amount of the bond be less than the total amount needed to serve the subdivision as established by the engineer who certifies the plat.

(c) The bond shall be conditioned upon construction or installation of water and wastewater facilities meeting the criteria established by these regulations and upon construction of facilities within the time stated on the plat, or on the document attached to the plat for the subdivision, or within any extension of time granted by the Commissioners' Court.

8.12 Review and Approval of Final Plats.

(a) Scope of review. The county will review the final plat to determine whether it meets the required standards.

(b) Disapproval authority. The commissioners court shall refuse to approve a plat if it does not meet the requirements prescribed by or under these rules.

(c) Prerequisites to approval. Final plat approval shall not be granted unless the subdivider has accomplished the following:

(1) dedicated the sites for the adequate water and sewerage facilities identified in the final plat to the appropriate retail public utility responsible for operation and maintenance of the facilities; and

(2) provided evidence that the water facilities and sewerage facilities have been constructed and installed in accordance with the criteria established within these rules and the approvals from TCEQ of the plans and specifications for such construction, including any change orders filed with these agencies; or

(3) obtained all necessary permits for the proposed water facilities and sewerage facilities (other than for OSSF permits on individual lots within the proposed subdivision) and has entered into a financial agreement with the county secured by a bond or other alternative financial guarantee such as a cash deposit or letter of credit for the provision of water and sewerage facilities with the bond or financial guarantee meeting the criteria established in Division 3 of this subchapter.

8.13 Time Extensions for Providing Facilities.

(a) Reasonableness. The commissioners court may extend, beyond the date specified on the plat or on the document attached to the plat, the date by which the required water and sewer service facilities must be fully operable if:

(1) any financial guarantees provided with the final plat as originally submitted are effective for the time of the requested extension or new financial guarantees that comply with Section 7.25(b)(4) of these standards are submitted which will be effective for the period of the extension; and

(2) the court finds the extension is reasonable and not contrary to the public interest.

(b) Timeliness. If the facilities are fully operable before the expiration of the extension period; the facilities are considered to have been made fully operable in a timely manner.

(c) Unreasonableness. An extension is not reasonable if it would allow a residence in the subdivision to be inhabited without water or sewer services that meet the standards of Division 2 of this subchapter.

8.14 Criteria for Subdivisions that Occurred Prior to September 1, 1989.

(a) Authority and scope. This section shall apply only to tracts of land that were divided into two or more parts to lay out a subdivision before September 1, 1989 and have not been platted or recorded. This section is in addition to the authority of the county to grant a delay or variance pursuant to Local Government Code Section 232.043 or a rule of the county adopted pursuant to such provision.

(b) Purpose. It is the purpose of this section to promote the public health of the county residents, to ensure that adequate water and sewerage facilities are provided in subdivisions within the jurisdiction of this county, and to establish the minimum standards for pre-1989 subdivisions for which no plat has been filed or recorded in the records of the county.

(c) Required plat. In the event that the owner of tract of land located outside the limits of a municipality who subdivided the tract into two or more parts to lay out a subdivision of the tract prior to September 1, 1989, including an addition, or to lay out suburban lots or building lots, and to lay out streets, alleys, squares, parks or other parts of the tract intended to be dedicated to public use or for the use of purchasers or owners of lots fronting on or adjacent to the streets, alleys, squares, parks, or other parts, was legally obligated to, but has failed to have a plat of the subdivision prepared, approved by the commissioners court, and filed, the owner of a residential lot which was created by the subdivision may have a plat of the individual lot prepared and approved by the commissioners court as provided in this section in lieu of the filing of a plat of the subdivision.

(d) Special criteria. The commissioners court may approve the plat of a residential lot which does not comply with the provisions of 4.1.1(d)(2) of this title (Setbacks), Section 8.7 of this title (Number of Dwellings per Lot), Section 8.9 (Final Engineering Report), and Section 7 of this title (Financial Guarantees for Improvements) as applied to an individual subdivided lot if such approval is in harmony with the general purpose and intent of these rules so that the public health, safety, and welfare may be secured and substantial justice done.

(1) Owners of individual lots in a single unplatted subdivision may file a joint request for approval of their respective individual residential lots.

(2) An application for approval of the plat of an individual lot shall be made in writing. The application shall state specifically the chapter, section, or subsection with which the plat does not comply and from which a waiver is being requested. The application shall contain available information and documentation which supports the requested approval. The applicant shall also provide such additional documentation as the commissioners court may request to support the application, including:

(A) a copy of a dated plat, sales contract, utility records, or other acceptable documentation that the subdivision occurred prior to September 1, 1989;

(B) the name and address of the original subdivider or the subdivider's authorized agent, if known;

(C) a survey and plat of the lot for which approval is requested, showing existing residences, roads, and utilities; and

(D) a deed, an affidavit of ownership or other evidence of ownership of the lot for which approval is requested.

(3) Approval of plats of individual lots shall be granted subject to the limitations of state law, and based on written findings by the commissioners court that:

(A) the lot for which approval is requested is within a tract that was subdivided prior to September 1, 1989, and is not owned by the original subdivider;

(B) a plat was required for the subdivision, but has not been filed with the county by the subdivider legally obligated to file it;

(C) an existing, currently occupied residential dwelling is located on the lot;

(D) existing water and sewer services which comply with the minimum standards set forth herein are available to the lot; and

(E) the request is reasonable, compliance with specified sections of these rules is impractical, and a waiver is not contrary to the public health and safety.

(e) Final determination. The commissioners' court shall make the final decision on an application for a waiver, following review and recommendation by the county planning commission or department, if any. The applicant may withdraw a request for a waiver at any point in the process. If the requested waiver application is approved by the commissioners court, the county shall issue a certificate stating that a plat of the residential lot has been reviewed and approved.

8.15 Oversight.
The owner, by submitting a plat, acknowledges the authority of the county and state agencies to lawfully enter and inspect property for purposes of execution of their statutory duties. Such inspection will not release the owner from any obligation to comply with the requirements of these rules.

8.16 General Enforcement Authority of County.
The provisions of this chapter are enforceable pursuant to the specific provisions hereof related to enforcement and state law including Water Code, Chapter 7 and Sections 16.353, 16.3535, 16.354, and 16.3545, and Local Government Code, Section 232.037 and Section 232.080.

SECTION 9 DRAINAGE AND FLOOD CONTROL

9.1 Stormwater Runoff.
Stormwater runoff from any development may not be released onto neighboring property or into any County drainage ditch, swale easement, culvert or other facility or any such drainage facility associated with an existing road, whether public or private, at a rate greater than runoff from the property in an undeveloped condition.

> **9.1.1** All entities, i.e. TxDOT, County Drainage Utilities, and Cities, in Jefferson County with jurisdiction over drainage in the area of a proposed subdivision shall be provided the drainage plan for the proposed subdivision for their review and approval.

9.2 Conveyance of 100-Year Storm Frequency Flows.
Any drainage system shall be designed to convey all channelized or concentrated flows from a 100-year storm event within defined right-of-way or drainage easements, which shall not be narrower than twenty feet (20') in width.

9.3 Completion of Drainage System Prior to Acceptance of Road Maintenance.
No streets will be accepted for maintenance by the County until all drainage structures, including culverts for all driveways constructed as of the acceptance date, have been both installed by the Applicant or occupant(s) of the Lot(s) and inspected and approved by the County.

9.4 10 Year Event - Maximum Headwater Elevation for Drainage Crossings for Neighborhood and Local Streets.
All neighborhood and local streets, culverts underneath roads, streets, and bridges shall be designed so that storm water runoff from a 10-year storm event crossing such a street, road or bridge shall not produce a headwater elevation at the pavement edge above the drainage structure. All drainage crossings of proposed streets and roadways shall be designed to convey a 10-year storm event and not more than 6" of water over the road in a 100-year storm event. All roads and streets shall be designed and constructed to withstand the impact of storm water being impounded adjacent to and flowing over the road or street. Streets or roadways that traverse defined areas of the 100-year floodplain shall not increase the water surface level or change the floodplain limits.

9.5 100 Year Event - Maximum Headwater Elevation for Drainage Crossings for Neighborhood and Local.
So that storm water runoff from a 100-year storm event crossing neighborhood and local streets, roads, or bridge shall not produce a headwater elevation at the roadway greater than six inches above the roadway crown elevation. This section (9.5) does not apply to residential driveway culverts.

9.6 Water Impact Requirements for Pavement Design.
All roads and streets shall be designed and constructed to withstand the impact of water being impounded adjacent to and flowing over the road or street.

9.7 Drainage Design Methodology.
Computations by a Texas Registered Professional Engineer to support all drainage designs shall be submitted to the Precinct Commissioner or Designated Agent for review. The methodologies shall be based upon commonly accepted engineering practices used within the area. These computations shall clearly demonstrate the drainage design for the proposed subdivision will not have a negative effect on properties either upstream or downstream of the proposed subdivision. Drainage improvements offsite from the proposed subdivision may be required to prevent any negative effects on other properties.

> **9.7.1** All computations of flood plans, culverts, channels, etc., shall be based on fully developed upstream conditions.

9.7.2 A drainage area of 64 acres or greater is required within a contributing watershed to create a "flood plain". For areas of flow with less than 64 acres of contributing area, no flood plain need be defined; however, a drainage easement must be dedicated for any concentrated flow.

9.7.3 By use of topographic contours, all known or identified instances of water "ponding" locations shall be shown on the subdivision development plans. "Ponding" may cause individual lot development flooding in the same manner as if the lot(s) were located within the floodplain. Consideration must be given to establishing a minimum Finished Floor Elevation on such lot(s) where ponding has been known to occur, or is identified by the topographic contours.

9.8 Easements.

9.8.1 All floodway concentrated flows for the 100-year storm event shall be contained within a dedicated drainage easement or right-of-way. All drainage easements shall provide a minimum of 15' in width outside the limits of the ditch or channel for maintenance purposes along one side for ditches less than 35' wide at the top; and along both sides for ditches more than 35' wide at the top.

9.8.2 No development whatsoever will be permitted in the floodway or within drainage easements.

9.9 Request for Additional Materials.
If the Precinct Commissioner or Designated Agent reasonably believes, based on materials submitted, that the Preliminary Plat or Final Plat will not comply with this section then they may request drainage data or other additional material to evaluate the Preliminary Plat or Final Plat, in which event the applicable review period will be recalculated from the date such completed and additional materials are submitted.

SECTION 10 REVISION AND CANCELLATION

10.1 Revision.
An Owner, Developer, or Applicant of an existing Lot or Lots in a platted Subdivision may submit an application to revise the recorded subdivision by submitting the following to the Engineering Department:

10.1.1 Revision Submittal Requirements:

(a) Subdivision Application;

(b) Ten copies of the proposed revised plat, conforming in all respects to the requirements of these Regulations; or, if submitted by a private homeowner who is not a developer in the Subdivision, other materials acceptable to the Precinct Commissioner or Designated Agent clearly setting forth the desired amendment;

(c) A statement giving the reason for the proposed revision;

(d) A filing fee equal to $100.00, plus $25.00 per affected Lot.

10.1.2 Review Period
The County will meet the review standards established by Chapter 232.009 of the Texas Local Government Code.

10.1.3 Public Notice
After the application is filed with the Commissioners Court, but before the application is considered by the Court, the Applicant shall file proof that the Applicant, at his expense, has delivered or published all notices required by Texas Local Government Code Section 232.009, including:

(a) A notarized publisher's affidavit demonstrating publication of the application in a newspaper of general circulation in the County. The notice must include a statement of the time and place at which the court will meet to consider the application and hear protests to the revision of the plat. The notice must be published at least three times during the period that begins on the 30th day and ends on the 7th day before the date of the meeting; and

(b) Except for plat revisions only combining existing tracts, the Applicant shall also provide proof that notice has been provided to each affected property owner by certified or registered mail, return receipt requested, at the affected property owner's address in the subdivided tract.

10.1.4 Criteria for Approval.
The Commissioners Court may approve an application to revise a Subdivision upon a finding that:

(a) The plat as revised conforms to the requirements of the Regulations, and one of the following has been satisfied:

(i) The revision will not interfere with the established rights of any owner of a part of the subdivided land, or

(ii) Each owner whose rights may be interfered with has agreed to the revision and signed a letter to the fact of their agreement.

10.1.5 Record Plat
Upon approval of the Revised Plat by Commissioners Court, the Applicant shall prepare a Record Plat for recordation in the Jefferson County Plat Records in accordance with these Regulations. The Record Plat must be recorded within three (3) months of the approval of the Revised Plat or it will become void.

10.2 Cancellation.
Any application to cancel an existing plat shall be submitted and considered in accordance with Chapter 232.008 of the Texas Local Government Code.

10.3 Combination.
Where the Owner of two or more platted Lots wishes to combine Lots and/or existing tracts, without creating new Lots, the Commissioners Court may allow conveyance of portions of one or more previously platted Lots by metes and bounds description without revising the plat in order to accomplish the combination. In this case, an Applicant should present the Precinct Commissioner or the County Judge with a letter of request describing the proposed combination of Lots, including the name and location of the subdivision and an approximate sketch or map of the intended combination. The Commissioner's Court may grant the request by vote at a subsequent meeting of the Court, without publishing special notice. So long as the division and combination of lots in no way decreases the minimum lot size required by the platted subdivision, or determined by the Jefferson County minimum land area requirements for use of an onsite sewage filtration system.

SECTION 11 PRIVATE ROAD SUBDIVISIONS

11.1 Requirements for Private Road Subdivisions. Requirements for Private Road Subdivisions are the same as those for Public Road Subdivisions with the following exceptions:

(a) No more than one (1) Private Road with single access to any existing Public Right-of-Way.

(b) The Subdivision entrance must be marked with a sign clearly legible from the nearest Public Right-of-Way "Private Subdivision"

(c) Each owner of land within the subdivision shall execute and file a covenant to run with the land which shall preserve the Private Road Right-of-Way for the benefit of all current and future Lot owners.

(d) No Lot within the Subdivision may be less than two (2) acres in size. This includes any portions of the Private Road Easement or any other easements which may encroach or otherwise be a part of the Lot.

11.2 Acceptance of Non-County Roads into the Jefferson County Road System. Person(s) that desire the County to take a Private Road into the County Road System must file a Plat. The requirements for the plat are the same as those for Public Road Subdivisions and must show any and all encroachments and all structures within twenty-five (25) feet of the Right-of-Way.

A Surveyor must set corners at all property lines that intersect the Right-of-Way.

Property Owners must supply proper size driveway culverts. Proper size will be determined by the Precinct Commissioner.

Owners of the road are required to file a Donation Deed to Jefferson County. This Donation Deed will include a Metes and Bounds Description of that portion of the road being donated.

SECTION 12 VARIANCES

12.1 Criteria for Variance.
The Commissioners Court shall have the authority to grant variances from these Regulations, when the public interest or the requirements of justice demands relaxation of the strict requirements of the Regulations. Factors to be considered by the Court in evaluating a request for variance shall include:

12.1.1 The actual situation of the property in question in relation to neighboring or similar properties, such that no special privilege not enjoyed by other similarly situated properties may be granted;

12.1.2 Whether strict enforcement of the Regulations would deny the Applicant the privileges or safety of similarly situated property with similarly timed development.

12.1.3 That the granting of the variance will not be detrimental to the public health, safety and welfare, or injurious to other property or will not prevent the orderly Subdivision of the land in the area in accordance with these Regulations; and

12.1.4 Whether there are special circumstances of conditions affecting the land or proposed development involved such that strict application of the provisions of these Regulations would deprive the applicant the reasonable use of this land and that failure to approve the variance would result in undue hardship to the applicant. Financial hardship, standing alone, shall not be deemed to constitute undue hardship.

12.2 Application Materials.
Any person who wishes to receive a variance should apply to the Engineering Department with a list of, and a written justification for, each variance requested.

12.3 Discretion to Grant Variances.
The decision of the Court whether to grant or deny a variance is at its complete discretion, and will be final.

SECTION 13 ENFORCEMENT AND PENALTIES

13.1 Category of Offense.
A person commits an offense if the person knowingly or intentionally violates a requirement of these Regulations. An offense under this provision is a Class B misdemeanor punishable by fine or imprisonment or both.

12.2 Enforcement Actions.
At the request of the Commissioners Court, the County Attorney with Felony Jurisdiction for Jefferson County, or other prosecuting attorney for the County, may file an action in a court of competent jurisdiction to:

> **12.2.1** Enjoin the violation or threatened violation of a requirement established by or adopted by the Commissioners Court under these Regulations; or
>
> **12.2.2** Recover damages in an amount adequate for the County to undertake any construction or other activity necessary to bring about compliance with a requirement established by or adopted by the Commissioner's Court under these Regulations.

13.3 Enforcement of Plat Notes.
The enforcement of plat notes or restrictions is generally the responsibility of the Applicant and other persons holding a property interest, whether in fee simple or by easement, in the Subdivision. Plat notes shall reflect that the County may enforce any plat notes imposed pursuant to these Regulations, any plat note affecting County rights of way or drainage or the public health, safety and welfare. Moreover, the Commissioners Court shall have the right and authority through appropriate legal procedures to prohibit the construction or connection of utilities or issuing of permits if the plat notes or restrictions have been violated.

SECTION 14 SEVERABILITY

14.1 Severability.
In the event any section, appendix, paragraph, sentence, clause or phrase of these Regulations shall be declared unconstitutional or invalid by the valid judgment or decree of any court of competent jurisdiction, such unconstitutionality or invalidity shall not affect any remaining phrases, clauses, sentences, paragraphs, sections, or appendices of these Regulations. It is the express intent of the Jefferson County Commissioners Court that the sections, appendices, paragraphs, sentences, clauses or phrases of these Regulations be severable.

PASS ON THIS _____.

APPROVED:

_____ County Judge Date:

_____ ATTEST:

_____ County Clerk Date:

APPENDIX 1 STANDARD PLAT NOTES & CERTIFICATIONS

Acknowledgment and certificate of dedication by the Owner, to wit:

For an individual:

STATE OF TEXAS
COUNTY OF JEFFERSON

KNOW ALL MEN BY THESE PRESENTS, That I (*Owner*), owner of (*Subdivision Acreage*) acres of land out of the _____, Jefferson County, Texas as conveyed to me by deed dated _____, and recorded in Volume ____, Page ____, Jefferson County Deed Records, DO HEREBY SUBDIVIDE (*Subdivision Acreage*) acres of land out of the _____, (Note: If the subdivision lies in more than one survey, determine the acreage in each survey and repeat for each original survey within the subdivision) to be known as the (*Subdivision Name*), in accordance with the plat shown hereon, subject to any and all easements or restrictions hereto fore granted and do hereby dedicate to the public (or: "owners of the property shown hereon" for private streets) the streets and easements shown hereon.

WITNESS MY HAND, this _____ day of _____, A.D., 20____.

_____
(Owner's Name) Owner

STATE OF TEXAS
COUNTY OF JEFFERSON

BEFORE ME, the undersigned authority, on this day personally appeared (*Owner's Name*) known to me to be person whose name is subscribed to the foregoing instrument and acknowledged to me that he executed the same for the purposes and consideration therein stated.

GIVEN UNDER MY HAND AND SEAL OF OFFICE this the ___ day of _____, A.D., 20____.

_____
NOTARY PUBLIC in and for Liberty County, Texas

For a corporation:

STATE OF TEXAS
COUNTY OF JEFFERSON

KNOW ALL MEN BY THESE PRESENTS, That (*Corporation Name*), a corporation organized and existing under the laws of the State of Texas, with its home address at (*Address, City and State*), owner of (*Subdivision Acreage*) acres of land out of the Original Survey, Jefferson County, Texas as conveyed to me by deed dated _____, and recorded in Volume ____, Page ____, Jefferson County Deed Records, DOES HEREBY SUBDIVIDE (*Subdivision Acreage*) acres of land out of the Original Survey, (Note: If the subdivision lies in more than one survey, determine the acreage in each survey and repeat for each original survey within the subdivision) to be known as the (Subdivision Name), in accordance with the plat shown hereon, subject to any and all easements or restrictions hereto fore granted and do hereby dedicate to the public (or: "owners of the property shown hereon" for private streets) the streets and easements shown hereon.

IN WITNESS WHEREOF the said *Corporation Name* has caused these presents to be executed by its *Corporate Title, Name*, thereunto duly authorized,

_____
(Owners Name) Owner

STATE OF TEXAS
COUNTY OF LIBERTY

BEFORE ME, the undersigned authority, on this day personally appeared (*Owner's Name*) known to me to be person whose name is subscribed to the foregoing instrument as Title of Corporate Name and acknowledged to me that he executed the same in such capacity as the act and deed of said corporation for the purposes and considerations therein stated.

GIVEN UNDER MY HAND AND SEAL OF OFFICE this the ___ day of _____, A.D., 20____.

_____
NOTARY PUBLIC in and for Jefferson County, Texas

Certificate of County Approval, to-wit:

STATE OF TEXAS
COUNTY OF JEFFERSON

I, _____, County Clerk of Jefferson County, Texas, do hereby certify that on the ___ day of _____, A.D. 20____, the Commissioners Court of Jefferson County, Texas passed an order authorizing the filing for record of this plat, and said order has been duly entered in the minutes of the said Court in Book _____, Page _____.

WITNESS MY HAND AND SEAL OF OFFICE this the ____ day of _____, A. D., 20____.

_____
County Judge
Jefferson County, Texas

_____
County Clerk
Jefferson County, Texas

Certificate of Recording, to wit:

STATE OF TEXAS
COUNTY OF JEFFERSON

I, _____, County Clerk of Jefferson County, Texas, do hereby certify that the foregoing instrument of writing with its certificate of authentication was filed for record in my office on the _____ day of _____, 20 ____, at ____ o'clock __.m., and duly recorded on the _____ day of _____, 20 ____, at ____o'clock __.m., in the Plat Records of Jefferson County, Texas, in Book ____, Page ____.

_____
COUNTY CLERK, JEFFERSON COUNTY, TEXAS

Certification of Surveyor:

I, _____, a Texas Registered Professional Land Surveyor certify that this plat has been prepared in accordance with the Subdivision Regulations of Jefferson County.

Development Regulations Notes:

No construction or other development within this subdivision may begin until all Jefferson County development requirements have been met.

Municipal/ETJ note:

No portion of this subdivision lies within the boundaries of any municipality's corporate city limits, or area of extra territorial jurisdiction.

OR

A portion of this subdivision lies within the (corporate limits) or (area of extra territorial jurisdiction) of the City of _____.

School District plat note:

This subdivision is within the boundaries of the _____ School District(s).

FEMA flood plain note:

(A) or (no) Portion of this subdivision lies within the boundaries of the 100 year flood plain as delineated on the FEMA Flood Insurance Rate Map for Jefferson County Community Panel # _____, date _____.

Utility notes:

Electric utility service will be provided by: _____.
Telephone utility service will be provided by: _____.
Gas utility service will be provided by: _____.
Water utility service will be provided by: _____.
Sewer utility service will be provided by: _____.
Cable utility service will be provided by: _____.

Sewage Disposal Note:

No structure in this subdivision shall be occupied until connected to a public sewer system or to an on-site wastewater system, which has been approved and permitted by Jefferson County.

Individual Water Supply Note:

No structure in this subdivision shall be occupied until connected to an individual water supply, state approved community water system, or engineered rainwater collection system.

Water Supply Note:

_____ Water Supply Corporation, an approved public water supply system, has adequate quantity to supply the subdivision and provisions have been made to provide service to each lot in accordance with the policies of the water supply system.

_____

Water Supply Representative

Pipeline Easement Note:

All existing pipeline easements within the limits of the subdivision have been shown.

Drainage Easement Note:

All drainage easements shown hereon shall be kept clear of fences, buildings, plantings, and other obstructions to the operation and maintenance of the drainage facilities.

Benchmark(s): (All Applicants are required to set a minimum of one permanent Benchmark).

Benchmark: _____

Irrevocable Letter of Credit:

IRREVOCABLE LETTER OF CREDIT NO. _____

TO: _____,
County Judge of Jefferson County, Texas and his successors in office

ISSUER: _____, a federally insured financial institution licensed to do business in the state of Texas

CUSTOMER:

AMOUNT OF SECURITY:

SUBDIVISION:

DATE OF POSTING:

EXPIRATION DATE: Two years from Date of Credit

The ISSUER hereby establishes this Credit and shall duly honor all drafts drawn and presented in accordance with this Credit. Jefferson County may draw on the ISSUER for the account of the CUSTOMER up to the aggregate AMOUNT OF SECURITY.

This Credit is conditioned on the performance of the duties of the CUSTOMER prior to the Expiration Date to provide for the construction and completion of the street, drainage, water and sewer improvements in the SUBDIVISION to according to the adopted Rules & Regulations of Jefferson County Road and Drainage Standards and Specifications and filing of the plat, so that the Improvements are performing to the Standards upon the approval of the construction of the Improvements.

The only requirement necessary to draw on any part or all of the total amount of this Credit is a letter from the County Judge indicating that the County considers a drawing on this Letter of Credit necessary in order to complete all or part of the SUBDIVISION Improvements to the County Standards. No further substantiation of the necessity for the draw is required by this Letter.

Partial reductions in the amount of this Credit may be allowed. Multiple recoveries less then the total amount of the Credit are allowed. If this Letter of Credit is unenforceable as a statutory obligation, the ISSUER shall be bound by this contract as a common law obligation.

Drafts must be presented on or before the EXPIRATION DATE by the close of business and will be honored within five (5) calendar days of presentment. In lieu of drawing on the Security, the County, in its discretion, may accept a substitute Security in the then current amount of the estimated cost of constructing the Improvements. This credit may be revoked only by the written consent of the ISSUER and the County.

Except as expressly set forth herein, this credit is governed by the "Uniform Customs and Practices for Documentary Credits" (International Chamber of Commerce Publication No. 500 (1993).

APPENDIX 2 STANDARD FORMS FOR CONSTRUCTION & MAINTENANCE SECURITY

Surety Bond:

PRINCIPAL:

SURETY: _____

With an A.M. Best Company, rating of "A" or greater and authorized to write Bonds in the State of Texas

BENEFICIARY:

SUBDIVISION:

SUM:

DATE:

EXPIRATION DATE: Two years from Date of Bond

The PRINCIPAL and SURETY, a Corporation with an A.M. Best Company rating of "A" or grated and authorized to write bonds in the State of Texas, are jointly and severally held and bound unto the BENEFICIARY in the above stated sum in U.S. currency, and amount fixed by the BENEFICIARY pursuant to Chapter 232 of the Texas Local Government Code.

This Bond is conditioned on the faithful performance of the duties of the PRINCIPAL prior to the Expiration Date to provide for the construction and completion of the street, drainage, water and sewer Improvements in the SUBDIVISION to current Jefferson County Road and Drainage Standards and Specifications so that the Improvements are performing to the Standards upon the approval of the construction of the Improvements.

Partial reductions in the Sum of this Bond may be allowed. Multiple recoveries less then the total amount of the Bond are allowed. If this Bond is unenforceable as a statutory Bond, the PRINCIPAL and SURETY shall be bound by this contract as a common law obligation.

In lieu of drawing on the BOND, BENEFICIARY, in its sole discretion, may accept a Substitute Bond in the then current amount of the estimated cost of constructing the Improvements in the SUBDIVISION.

PRINCIPAL	SURETY
By: _____	By: _____
Authorized Representative	Authorized Representative*
_____	_____
Mailing Address	Mailing Address
_____	_____
City, State & Zip Code	City, State & Zip Code

*A certified copy of the Bylaws of the Surety or a Power of Attorney evidencing the authority of the representative to sign this Bond obligation must be provided to the County.

ISSUER

BY: _____

NAME: _____

TITLE: _____
Authorized Representative

ADDRESS OF ISSUER

_____

_____

_____

APPENDIX 3 SAMPLE FORM FOR WATER AND WASTEWATER SERVICE AGREEMENTS

Sample Form for Water Service Agreement

AGREEMENT REGARDING WATER SERVICE FOR THE PROPOSED
_____ SUBDIVISION

PARTIES: This Agreement is by and between the Utility and the Subdivider, to wit:
The Utility is the governing board or owner of a retail public utility which supplies of drinking water known as _____.

The Subdivider is _____,
who is the owner, or the authorized agent of the owner, of a tract of land in Jefferson County, Texas, that has been proposed to be divided into a subdivision (the Subdivision) known as
_____.

TERMS: The Subdivider has prepared a plat of the Subdivision for submission to Jefferson County for its approval. The Subdivider plans to construct for the Subdivision a drinking water distribution system to be connected to the Utility's public water system. The Utility has reviewed the plans for the Subdivision (the Plans) and has estimated the drinking water flow anticipated to be needed by the Subdivision under fully built-out conditions (the anticipated water flow) to be approximately _____ gallons daily.

The Utility covenants that it has or will have the ability to provide the anticipated water flow for at least thirty years, and that it will provide that water flow. These covenants will be in effect until thirty years after the plat of the Subdivision has been recorded and the Subdivision's water distribution system has been connected to the Utility's water supply system.

The Subdivider covenants that the water distribution system will be constructed as shown in the Plans and as provided for through the plat-approval process so that the residents of the lots of the Subdivision may receive drinking water service from the Utility. Upon completion of the water distribution system and upon its approval and acceptance by the Utility, the Subdivider will convey to the Utility all right and title to the water distribution system.

The Subdivider has paid the Utility the sum of $ _____ which sum represents the total costs of water meters, water rights acquisition fees, and all membership or other fees associated with connecting the individual lots in the Subdivision to the Utility's water supply system. The above provisions notwithstanding, this Agreement shall no longer be in effect if the plat of the Subdivision is not approved by Jefferson County or by a municipality whose approval is required.

By affixing his or her signature to this Agreement, the person signing for the Utility warrants that he or she is authorized to sign this Agreement on behalf of the Utility. By affixing his or her signature to this Agreement, the person signing for the Subdivider warrants that he or she is authorized to sign this Agreement on behalf of the Subdivider.

This Agreement is effective on _____, 20____.

The Utility

By: _____

Printed Name: _____

Office or Position: _____

Date: _____

The Subdivider

By: _____

Printed Name: _____

Office or Position: _____

Date: _____

Sample Form for Wastewater Service Agreement

AGREEMENT REGARDING WASTEWATER SERVICE FOR THE PROPOSED
_____ SUBDIVISION

PARTIES: This Agreement is by and between the Utility and the Subdivider, to wit:
The Utility is the governing board or owner of a retail public utility which provides wastewater treatment and is known as _____.

The Subdivider is _____,
who is the owner, or the authorized agent of the owner, of a tract of land in Jefferson County, Texas, that has been proposed to be divided into a subdivision (the Subdivision) known as
_____.

TERMS: The Subdivider has prepared a plat of the Subdivision for submission to Jefferson County for its approval. The Subdivider plans to construct for the Subdivision a wastewater collection system to be connected to the Utility's wastewater treatment system. Such wastewater will consist of domestic sewage, i.e., waterborne human waste and waste from domestic activities such as bathing, washing, and food preparation. The Utility has reviewed the plans for the Subdivision (the Plans) and has estimated the wastewater flow projected from the Subdivision under fully built-out conditions (the projected wastewater flow) to be approximately _____ gallons daily.

The Utility covenants that it has or will have the capacity to treat the projected wastewater flow, and that it will treat that wastewater flow for at least thirty years. These covenants will be in effect until thirty years after the plat of the Subdivision has been recorded and the Subdivision's wastewater collection system has been connected to the Utility's wastewater treatment plant.

The Subdivider covenants that the wastewater collection system will be constructed as shown in the Plans and as provided for through the plat approval process so that the residents of the lots of the Subdivision may receive wastewater treatment service from the Utility. Upon completion of the wastewater collection system and upon its approval and acceptance by the Utility, the Subdivider will convey to the Utility all right and title to the wastewater collection system.

Insert the following paragraph if the Utility imposes any fees for connection of individual lots to the Utility's wastewater collection and treatment system:

The Subdivider has paid the Utility the sum of $ _____ which sum represents the total costs of tap fees, capital recovery charges, and other fees associated with connecting the individual lots in the Subdivision to the Utility's wastewater collection and treatment system.

The above provisions notwithstanding, this Agreement shall no longer be in effect if the plat of the Subdivision is not approved by Jefferson County or by a municipality whose approval is required.

By affixing his or her signature to this Agreement, the person signing for the Utility warrants that he or she is authorized to sign this Agreement on behalf of the Utility. By affixing his or her signature to this Agreement, the person signing for the Subdivider warrants that he or she is authorized to sign this Agreement on behalf of the Subdivider.

This Agreement is effective on _____, 20____.

The Utility

By: _____

Printed Name: _____

Office or Position: _____

Date: _____

The Subdivider

By: _____

Printed Name: _____

Office or Position: _____

Date: _____

APPENDIX 4 SAMPLE OSSF (On Site Sewage Facility) CHART

SAMPLE - consult the TCEQ Regulations for proper sizes

Required Clear Space for an OSSF (On Site Sewage Facility)

Type of Facility	Usage Rate - Gallons per Day (without water saving devices)	Required Clear Area for OSSF (In Square Feet)	Usage Rate - Gallons per Day (with water saving devices)	Required Clear Area for OSSF (in Square Feet)
Single Family (1-2 Bedrooms) less than 1500 Sq. Ft.	225	6428	180	5143
Single Family (3 Bedrooms) less than 2500 Sq. Ft.	300	8571	240	6857
Single Family (4 Bedrooms) less than 3500 Sq. Ft.	375	10714	300	8571
Single Family (5 Bedrooms) less than 4500 Sq. Ft.	450	12857	360	10286
Single Family (6 Bedrooms) less than 5500 Sq. Ft.	525	15000	420	12000

APPENDIX 5 JEFFERSON COUNTY FLOOD DAMAGE PREVENTION ORDIANCE

Meeting Date:

JUL 27 2009

Agenda Item No. 14

JUL 2009
Received
Jefferson County
Engineer's Office

JEFFERSON COUNTY
FLOOD DAMAGE PREVENTION ORDER

SECTION 1.0
STATUTORY AUTHORIZATION, FINDINGS OF FACT, PURPOSE AND OBJECTIVES

1.1 STATUTORY AUTHORIZATION

The Legislature of the State of Texas has in (statutes) Texas Water Code § 16.315, delegated the responsibility to local governmental units to adopt regulations designed to minimize flood losses. Texas Water Code also delegates the authority to establish fees and penalties necessary to necessary to implement the requirements of any adopted regulations. Therefore, the Commissioners Court of Jefferson County, Texas, does order as follows:

1.2 FINDINGS OF FACT

(1) The flood hazard areas of Jefferson County are subject to periodic inundation which results in loss of life and property, health, and safety hazards, disruption of commerce and governmental services, extraordinary public expenditures for flood protection and relief, and impairment of the tax base, all of which adversely affect the public health, safety, and general welfare.

(2) These flood losses are caused by the cumulative effect of obstructions in areas of special flood hazards which increase flood heights and velocities, and when inadequately anchored, damage uses in other areas. Uses that are inadequately flood proofed, elevated, or otherwise protected from flood damage also contribute to the flood loss.

1.3 STATEMENT OF PURPOSE

It is the purpose of this order to promote the public health, safety, and general welfare, and to minimize public and private losses due to flood conditions in specific areas by provisions designed:

(1) To protect human life and health;

(2) To minimize expenditure of public money and costly flood control projects;

(3) To minimize the need for rescues and relief efforts associated with flooding and generally undertaken at the expense of the general public;

(4) To minimize prolonged business interruptions;

(5) To minimize damage to public facilities and utilities such as water and gas mains, electric, telephone and sewer lines, streets, and bridges located in the areas of special flood hazard;

(6) To help maintain a stable tax base by providing for the sound use and development of areas of special flood hazard so as to minimize future flood blight areas;

(7) To ensure that potential buyers are notified that property is in an area of special flood hazard; and,

(8) To ensure that those who occupy the areas of special flood hazard assume responsibility for their actions.

(9) To restrict circumstances under which construction may take place in flood hazard areas.

1.4 METHODS OF REDUCING FLOOD LOSSES

In order to accomplish its purposes, this Order includes methods and provisions for:

(1) Restricting or prohibiting uses which are dangerous to health, safety, and property due to water or erosion hazards, or which result in damaging increases in erosion or in flood heights or velocities;

(2) Requiring that uses vulnerable to floods, including facilities which serve such uses, be protected against flood damage at the time of initial construction;

(3) Controlling the alteration of natural flood plains, stream channels, and natural protective barriers, which help accommodate or channel flood waters;

(4) Controlling filling, grading, dredging, and other development which may increase flood damage; and

(5) Preventing or regulating the construction of flood barriers which will unnaturally divert flood waters or may increase flood hazards in other areas.

SECTION 2.0
DEFINITIONS

Unless specifically defined below, words or phrases used in this Order shall be interpreted, so as to give them the meaning they have in common usage and to give this Order it's most reasonable application.

"ACCESSORY STRUCTURES" means the low cost buildings such as detached garages, boathouses, small pole barns and storage sheds which are not used for human habitation.

"APPEAL" means a request for a review of the interpretation of any provision of this order or a request for a variance.

"AREA OF SHALLOW FLOODING" means a designated AO, or AH Zone on the Flood Insurance Rate Map (FIRM). The base flood depths range from one to three feet; a clearly defined channel does not exist; the path of flooding is unpredictable and indeterminate; and, velocity flow may be evident. AO is characterized as sheet flow and AH indicates ponding.

"AREA OF SPECIAL FLOOD HAZARD" means the land in the flood plain within a community subject to a one percent or greater chance of flooding in any given year. Designation on maps always includes the letters A or V. **"BASE FLOOD"** means the flood having a one percent

chance of being equaled or exceeded in any given year. Also referred to as the "100-year flood". Designation on maps always includes the letters A or V.

"BASEMENT" means any area of the building having its floor sub grade (below ground level) on all sides. **"CRAWLSPACE"** is an enclosed area below the base flood elevation and, as such, must have openings that equalize hydrostatic pressures by allowing for the automatic entry and exit of flood waters.

"COASTAL HIGH HAZARD AREA" means an area of special flood hazard extending from offshore to the inland limit of a primary frontal dune along an open coast and any other area subject to high velocity wave action from storms or seismic sources

"CRITICAL FACILITY" means a facility for which even a slight chance of flooding might be too great. Critical facilities include, but are not limited to, schools, nursing homes, hospitals, police, fire and emergency response installations, installations which produce, use or store hazardous materials or hazardous waste.

"DEVELOPMENT" means any man-made change to improved or unimproved real estate, including but not limited to, buildings or other structures, mining, dredging, filling, grading, paving, excavation or drilling operations or storage of equipment or materials located within the area of special flood hazard.

"DEVELOPMENT PERMIT" means the permit that is issued by the Jefferson Environmental Control Department for construction or substantial improvement of structures.

"ELEVATED BUILDING" means for insurance purposes, a non-basement building which has its lowest elevated floor raised above ground level by foundation walls, shear walls, posts, piers, pilings, or columns.

"EXISTING MANUFACTURED HOME PARK OR SUBDIVISION" means a manufactured home park subdivision for which the construction of facilities for servicing the lots on which the manufactured homes are to be affixed (including, at a minimum, the installation of utilities, the construction of streets, and either final site grading or the pouring of concrete pads) is completed before the effective date of the adopted floodplain management regulations.

"EXPANSION TO AN EXISTING MANUFACTURED HOME PARK OR SUBDIVISION" means the preparation of additional sites by the construction of facilities for servicing the lots on which the manufactured homes are to be affixed (including the installation of utilities, the construction of streets, and either final site grading or the pouring of concrete pads).

"FLOOD" OR "FLOODING" means a general and temporary condition of partial or complete inundation of normally dry land areas from:

(1) The overflow of inland or tidal waters and/or

(2) The unusual and rapid accumulation of runoff of surface waters from any source.

"FLOOD INSURANCE RATE MAP (FIRM)" means the official map on which the Federal Insurance Administration has delineated both the areas of special flood hazards and the risk premium zones applicable to the community.

"FLOOD INSURANCE STUDY" means the official report provided by the Federal Insurance Administration that includes flood profiles, the Flood Boundary-Floodway Map, and the water surface elevation more than one foot.

"LOWEST FLOOR" means the lowest floor of the lowest enclosed area (including basement) of a structure. An unfinished or flood resistant enclosure, usable solely for parking of vehicles, building access or storage, in an area other than an a basement area, is not considered a building's lowest floor, provided that such enclosure is not built so as to render the structure in violation of the applicable non-elevation design requirements of this Order found at § 5.2-1(2).

"MANUFACTURED HOME" means a structure, transportable in one or more sections, which is built on a permanent chassis and is designed for use with or without a permanent foundation when attached to the required utilities. The term "manufactured home" does not include a "recreational vehicle."

"MANUFACTURED HOME PARK OR SUBDIVISION" means a parcel (or contiguous parcels) of land divided into two or more manufactured home lots for rent or sale.

"NEW CONSTRUCTION" means structures for which the "start of construction" commenced on or after the effective date of this Order.

"NEW MANUFACTURED HOME PARK OR SUBDIVISION" means a manufactured home park or subdivision for which the construction of facilities for servicing the lots on which the manufactured homes are to be affixed (including at a minimum, the installation of utilities, the construction of streets, and either final site grading or the pouring of concrete pads) is completed on or after the effective date of adopted floodplain management regulations.

"RECREATIONAL VEHICLE" means a vehicle, which is:

(a) Built on a single chassis;

(b) 400 square feet or less when measured at the largest horizontal projection;

(c) Designed to be self-propelled or permanently towable by a light duty truck; and

(d) Designed primarily not for use as a permanent dwelling, but as temporary living quarters for recreational, camping, travel, or seasonal use.

"REPETITIVE LOSS" means flood-related damages sustained by a structure on two separate occasions during any consecutive 10-year period for which the cost of repairs at the time of each such flood event, on the average, equals or exceeds 25 percent of the market value of the structure before damage occurred.

"START OF CONSTRUCTION" includes substantial improvement, and means the date the development permit was issued, provided the actual start of construction, repair, reconstruction, placement or other improvement was within 180 days of the permit date. The actual start means either the first placement of permanent construction of a structure on a site, such as the pouring of slab or footings, the installation of piles, the construction of columns, or any work beyond the state of excavation; or the placement of a manufactured home on a foundation.

Permanent construction does not include land preparation, such as clearing, grading and filling; nor does it include the installation of streets and/or walkways, nor does it include excavation for a basement, footings, piers, or foundations or the erection of temporary forms; nor does it include the installation on the property of accessory buildings, such as garages or sheds not occupied as dwelling units or not part of the main structure. For a substantial improvement, the actual start of construction means the first alteration of any wall, ceiling, floor, or other structural part of a building, whether or not that alteration affects the external dimensions of the building.

"STRUCTURE" means a walled and roofed building including a gas or liquid storage tank that is principally above ground.

"SUBSTANTIAL DAMAGE" means damage of any origin sustained by a structure whereby the cost of restoring the structure to it's before damaged condition would equal or exceed 50 percent of the market value of the structure before the damage occurred.

"SUBSTANTIAL IMPROVEMENT" means any repair, reconstruction, or improvement of a structure, the cost of which equals or exceeds 50 percent of the market value of the structure, either:

(1) Before the improvement or repair is started; or

(2) If the structure has been damaged and is being restored, before the damage occurred. For the purposes of this definition, "substantial improvement" is considered to occur when the first alteration of any wall, ceiling, floor, or other structural part of the building commences, whether or not that alteration affects the external dimensions of the structure.

This term does not, however, include either:

(1) Any project for improvement of a structure to correct existing violations of state or local health, sanitary, or safety code specifications which have been identified by the local code enforcement official and which are the minimum necessary to assure safe living conditions, or

(2) Any alteration of a structure listed on the National Register of Historic Places or a State Inventory of Historic Places.

"VARIANCE" means a grant of relief from the requirements of this Order which permits construction in a manner that would otherwise be prohibited by this Order.

"WATER DEPENDENT" means a structure for commerce or industry which cannot exist in any other location and is dependent on the water by reason of the intrinsic nature of its operations.

SECTION 3.0
GENERAL PROVISIONS

3.1 LANDS TO WHICH THIS ORDER APPLIES

This Order shall apply to all areas of special flood hazards within the jurisdiction of Jefferson County.

3.2 BASIS FOR ESTABLISHING THE AREAS OF SPECIAL FLOOD HAZARD

The areas of special flood hazard identified by the Federal Insurance Administration in a scientific and engineering report entitled "The Flood Insurance Study for Jefferson County," dated December 1, 1982, and any revisions thereto, with accompanying Flood Insurance Maps, and any revisions thereto, are hereby adopted by reference and declared to be a part of this Order. The Flood Insurance Rate Maps are on file at The County Engineering Department, Jefferson County, Texas. The best available information for flood hazard area identification as outlined in § 4.3-2 shall be the basis for regulation until a new FIRM is issued which incorporates the data utilized under § 4.3-2.

3.3 PENALTIES FOR NON-COMPLIANCE

No structure or land shall hereafter be constructed, located, extended, converted, or altered without full compliance with the terms of this Order and other applicable regulations. Violations of the provisions of this Order by failure to comply with any of its requirements (including violations of conditions and safeguards established in connection with conditions) shall constitute a misdemeanor. Any person who violates this Order or fails to comply with any of its requirements shall upon conviction thereof, be fined not more than $100.00 for each act of violation and for each day of violation, and in addition, shall pay all costs and expenses involved in the case. Nothing herein contained shall prevent Jefferson County from taking such other lawful action as is necessary to prevent or remedy any violation.

3.4 ABROGATION AND GREATER RESTRICTIONS

This Order is not intended to repeal, abrogate, or impair any existing easements, covenants, or deed restrictions. However, where this Order and another Order, easement, covenant, or deed restriction conflict or overlap, whichever imposes the more stringent restrictions shall prevail.

3.5 INTERPRETATIONS

In the interpretation and application of this Order, all provisions shall be:

(1) Considered as minimum requirements;

(2) Liberally construed in favor of the governing body; and,

(3) Deemed neither to limit or repeal any other powers granted under State Statutes.

3.6. WARNING AND DISCLAIMER OF LIABILITY

The degree of flood protection required by this Order is considered reasonable for regulatory purposes and is based on scientific and engineering considerations. Larger floods can and will occur. Flood heights may be increased by man-made or natural causes. This Order does not imply that land outside the areas of special flood hazards or uses permitted within such areas will be free from flooding or flood damages. This Order shall not create liability on the part of Jefferson County, any officer or employee thereof, of the Federal Insurance Administration, for

any flood damages that result from reliance on this Order or any administrative decision lawfully made hereunder.

3.7. SEVERABILITY

If any provision or provisions of this Agreement are held to be invalid, illegal, unenforceable or in conflict with the law of any jurisdiction, the validity, legality and enforceability of the remaining provisions shall not in any way be affected or impaired thereby.

SECTION 4.0
ADMINISTRATION

4.1 ESTABLISHMENT OF DEVELOPMENT PERMIT

4.1-1 Development Permit Required

A development permit shall be obtained before any construction or substantial development or development begins within any area of special flood hazard established in § 3.2. The permit shall be for all structures, including manufactured homes, as set forth in the "DEFINITIONS," and for all development, including fill and other activities, also set forth in the "DEFINITIONS." The Permit Application is in **Appendix (1).** Also required is an Elevation Certificate as shown in **Appendix (2).**

4.1-2 Application for Development Permit

Application for a development permit shall be made on forms furnished by the Environmental Control Department and may require items that include, but not be limited to, plans in duplicate drawn to scale showing the nature, location, dimensions, and elevations of the area in question, existing or proposed structures, fill, storage of materials, drainage facilities, and the location of the foregoing. Specifically the following information is required:

(1) Certified elevation, in relation to mean sea level, of the lowest floor (including basement) of all structures;

(2) Certified elevation in relation to mean sea level to which any structure has been flood proofed;

(3) Certification by a registered professional engineer or architect that the flood proofing methods for any non-residential structure meet the flood proofing criteria in § 5.2-2; and

(4) Description of the extent to which a watercourse will be altered or relocated as a result of proposed development.

4.2 DESIGNATION OF THE COUNTY ENGINEER AS THE JEFFERSON COUNTY FLOODPLAIN MANAGER

The Jefferson County Engineer is hereby appointed to administer and implement this Order by granting or denying development permit applications in accordance with its provisions.

4.3 DUTIES AND RESPONSIBILITIES OF THE FLOODPLAIN ADMINISTRATOR

Duties of the Floodplain Administrator shall include, but not be limited to:

4.3-1 Permit Review

(1) Review all development permits to determine that the permit requirements of this Order have been satisfied.

(2) Review all development permits to determine that all necessary permits have been obtained from those Federal, State, or Local governmental agencies from which prior approval is required.

(3) Review all development permits to determine if the proposed development is located in the floodway. If located in the floodway, assure that the encroachment provisions of § 5.3(1) are met.

(4) Deny applications for development permits which do not comply with the provisions of the Order or sound flood plain management or other state or federal regulations or laws.

4.3-2 Use of Other Base Flood Data (In A Zones)

When base flood elevation data has not been provided (A Zones) in accordance with § 3.2, BASIS FOR ESTABLISHING THE AREAS OF SPECIAL FLOOD HAZARD, the Floodplain Administrator shall obtain, review, and reasonably utilize any base flood elevation and floodway data available from a Federal, State or other source, in order to administer §§ 5.2, SPECIFIC STANDARDS, and 5.3 FLOODWAYS.

4.3-3 Information to be Obtained and Maintained by Flood Plain Manager

(1) Base flood elevation data as provided through the Flood Insurance Study, FIRM, or as required as in Sec. 4.3-2; record the actual elevation (in relation to mean sea level) of the lowest floor (including basement) of all new or substantially improved structures; and information regarding whether or not the structure contains a basement.

(2) For all new or substantially improved flood proofed structures where base flood elevation data is provided through the Flood Insurance Study, FIRM, or as required in §4.3-2.

(i) Obtain and record the actual elevation (in relation to mean sea level), and
(ii) Maintain the flood proofing certifications required in § 4.1-2(3).

(3) Maintain for public inspection all records pertaining to the provisions of this Order.

4.3-4 Alteration of Watercourses

(1) Notify adjacent communities and the Department of Land Conservation and Development prior to any alteration or relocation of a watercourse, and submit evidence of such notification to the Federal Insurance Administration.

(2) Require that maintenance is provided within the altered or relocated portion of said watercourse so that the flood carrying capacity is not diminished.

4.3-5 Interpretation of FIRM Boundaries

Make interpretations where needed, as to exact location of the boundaries of the areas of special flood hazards (for example, where there appears to be a conflict between a mapped boundary and actual field conditions). The person contesting the location of the boundary shall be given a reasonable opportunity to appeal the interpretation as provided in § 4.4.

4.4 VARIANCE PROCEDURE

4.4-1 Appeal Board

(1) The Jefferson County Commissioners' Court shall hear and decide all timely filed appeals and requests for variances from the requirements of this Order. To be timely, an appeal of the Flood Plain Manager's denial must be in writing within 30 days of such denial.

(2) The Jefferson County Commissioners' Court shall hear and decide appeals only when it is alleged there is an error in any requirement, decision, or determination made by the Floodplain Administrator in the enforcement or administration of this Order.

(3) Those aggrieved by the decision of the Jefferson County Commissioners' Court, may appeal that decision to the Court of Competent Jurisdiction as provided by law.

(4) In ruling on appeals, the Jefferson County Commissioners' Court shall consider all technical evaluations, all relevant factors, standards specified in other sections of this Order, including by not limited to:

(i) The risk that materials may be swept onto other lands to the injury of others;
(ii) The risk to life and property due to flooding or erosion damage;
(iii) The susceptibility of the proposed facility and its contents to flood damage and the effect of such damage on the individual owner;
(iv) The importance of the services provided by the proposed facility to the community;
(v) The necessity to the facility of a waterfront location, where applicable;
(vi) The availability of viable alternative locations for the proposed use which are not subject to flooding or erosion damage;
(vii) The compatibility of the proposed use with existing and anticipated development;

(viii) The relationship of the proposed use to the comprehensive plan and flood plain management program for that area;

(ix) The safety of access to the property by ordinary and emergency vehicles during times of flooding;

(x) The expected heights, velocity, duration, rate of rise, and sediment transport of the flood waters and the effects of wave action, if applicable, expected at the site; and,

(xi) The costs of providing governmental services during and after flood conditions, including maintenance and repair of public utilities and facilities such as sewer, gas, electrical, and water systems, and streets and bridges.

(5) Upon consideration of the factors of § 4.4-1(4) and the purposes of this Order, the Jefferson County Commissioners' Court may attach such conditions to the granting of variances as it deems necessary to further the purposes of this Order.

(6) The County Clerk and County Engineer shall maintain the records of all appeal actions. The County Engineer must report any granted variances to the Federal Insurance Administration upon request.

4.4-2 Conditions for Variances

(1) Generally, the only condition under which a variance from the elevation standard may be issued is for new construction and substantial improvements to be erected on a lot of one-half acre or less in size contiguous to and surrounded by lots with existing structures constructed below the base flood level, providing items (i-xi) in § 4.4-1(4) have been fully considered. As the lot size increases, the technical justification required for issuing the variance increases.

(2) Variances may be issued for the reconstruction, rehabilitation, or restoration of structures listed on the National Register of Historic Places or the State Inventory of Historic Places, without regard to the procedures set forth in this section.

(3) Variances shall not be issued within a designated floodway if any increase in flood levels during the base flood discharge would result.

(4) Variances shall only be issued upon a determination that the variance is the minimum necessary, considering the flood hazard, to afford relief.

(5) Variances shall only be issued upon:

(i) A showing of good and sufficient cause;

(ii) A determination that failure to grant the variance would result in exceptional hardship to the applicant;

(iii) A determination that the granting of a variance will not result in increased flood heights, additional threats to public safety, extraordinary public expense, create nuisances, cause fraud on or victimization of the public as identified in § 4.1-4(4), or conflict with existing local laws or orders.

(6) Variances as interpreted in the National Flood Insurance Program are based on the general zoning law principle that they pertain to a physical piece of property;

they are not personal in nature and do not pertain to the structure, its inhabitants, economic or financial circumstances. They primarily address small lots in densely populated residential neighborhoods. As such, variances from the flood elevations should be quite rare.

(7) Variances may be issued for non-residential buildings in vary limited circumstances to allow a lesser degree of flood proofing than watertight or dry-flood proofing, where it can be determined that such action will have low damage potential, complies with all other variance criteria, except § 4.4-2(1), and otherwise complies with §§ 5.1-1 and 5.1-2 of the GENERAL STANDARDS.

(8) Any applicant to whom a variance is granted for a structure to be built with a lowest floor elevation below base flood elevation is presumed to know that the cost of flood insurance will be commensurate with the increased risk from the reduced lowest floor elevation.

SECTION 5.0
PROVISIONS FOR FLOOD HAZARD REDUCTION

5.1 GENERAL STANDARDS

In all areas of special flood hazards, the following standards are required:

5.1-1 Anchoring

(1) All new construction and substantial improvements shall be anchored to prevent flotation, collapse, or lateral movement of the structure.

(2) All manufactured homes must likewise be anchored to prevent flotation, collapse, or lateral movement, and shall be installed using methods and practices that minimize flood damage. Anchoring methods may include, but are not limited to, use of over-the-top or frame ties to ground anchors (*Reference* FEMA's "Manufactured Home Installation in Flood Hazard Areas" guidebook for additional techniques).

5.1-2 AH Zone Drainage

Adequate drainage paths are required around structures on slopes to guide floodwaters around and away from proposed structures.

5.1-3 Construction Materials and Methods

(1) All new construction and substantial improvements shall be constructed with materials and utility equipment resistant to flood damage.

(2) All new construction and substantial improvements shall be constructed using methods and practices that minimize flood damage.

(3) Electrical, heating, ventilation, plumbing, and air-conditioning equipment and other service facilities shall be designed and/or otherwise elevated or located so as to prevent water from entering or accumulating within the components during conditions of flooding.

5.1-4 Utilities

(1) All new and replacement water supply systems shall be designed to minimize or eliminate infiltration of flood waters into the system;

(2) New and replacement sanitary sewage systems shall be designed to minimize or eliminate infiltration of flood waters into the systems and discharge from the systems into flood waters; and,

(3) On-site waste disposal systems shall be located to avoid impairment to them or contamination from them during flooding.

5.1-5 Subdivision Proposals

(1) All subdivision proposals shall be consistent with the need to minimize flood damage;

(2) All subdivision proposals shall have public utilities and facilities such as sewer, gas, electrical, and water systems located and constructed to minimize or eliminate flood damage;

(3) All subdivision proposals shall have adequate drainage provided to reduce exposure to flood damage; and,

(4) Where base flood elevation data has not be provided or is not available from another authoritative source, it shall be generated for subdivision proposals and other proposed developments which contain at least 50 lots or 5 acres (whichever is less).

5.1-6 Review of Building Permits

Where elevation data is not available either through the Flood Insurance Study, FIRM, or from another authoritative source (§ 4.3-2), applications for building permits shall be reviewed to assure that proposed construction will be reasonably safe from flooding. The test of reasonableness is a local judgment and includes use of historical data, high water marks, photographs of past flooding, etc., where available. Failure to elevate at least two feet above grade in these zones may result in higher insurance rates.

5.2 SPECIFIC STANDARDS

In all areas of special flood hazards where base flood elevation data has been provided (Zones A1-30, AH and AE) as set forth in § 3.2, BASIS FOR ESTABLISHING THE AREAS OF SPECIAL FLOOD HAZARD, or § 4.3-2, use of other base flood data (in A Zones), the following provisions are required:

5.2-1 Residential Construction

(1) New construction and substantial improvement of any residential structure shall have the lowest floor, including basement, elevated to above the base flood elevation, plus one (one) foot.

(2) Fully enclosed areas below the lowest floor that are subject to flooding are prohibited, or shall be designed to automatically equalize hydrostatic flood forces on exterior walls by allowing for the entry and exit of floodwaters. Designs for meeting this requirement must either be certified by a registered professional engineer or architect or must meet or exceed the following minimum criteria:

(i) A minimum of two openings having a total net area of not less than one square inch for every square foot of enclosed area subject to flooding shall be provided.
(ii) The bottom of all openings shall be no higher than one foot above grade.
(iii) Openings may be equipped with screens, louvers, or other coverings or devices provided that they permit the automatic entry and exit of floodwaters.
(iv) Below grade, crawlspaces are prohibited at sites where the velocity of floodwaters exceeds five (5) feet per second.
(v) All building utility systems within the crawlspace shall be elevated above base flood elevation or be designed so that floodwaters cannot enter or accumulate within the system component during flood conditions.
(vi) The interior of a crawlspace below the base flood elevation must not be more than 2 feet below the lowest adjacent exterior grade (LAG). The height of the below grade crawlspace, measured from the interior grade of the crawlspace to the top of the crawlspace foundation, must not exceed 4 feet at any point.
(vii) Below grade crawlspaces constructed in accordance with the requirements listed in this Sub-Section, shall not be considered basements. However, applicants who construct buildings that have below grade crawlspaces are hereby advised that such buildings will have higher flood insurance premiums than buildings that have crawlspaces with interior elevations at or above the lowest adjacent grade.

5.2-2 Non-Residential Construction

New construction and substantial improvement of any commercial, industrial or other non-residential structure shall either have the lowest floor, including basement, elevated at or above the base flood elevation, plus 1 (one) foot; or, together with attendant utility and sanitary facilities, shall:

(1) Be flood proofed so that below the base flood level the structure is watertight with walls substantially impermeable to the passage of water;

(2) Have structural components capable of resisting hydrostatic and hydrodynamic loads and effects of buoyancy;

(3) Be certified by a registered professional engineer or architect that the design and methods of construction are in accordance with accepted standards of practice for meeting provisions of this Sub-Section, based on their development and/or review of the structural design, specifications and plans. Such certifications shall be provided to the official as set forth in § 4.3-3(2). The Floodproofing Certificate shown in **Appendix (3)** shall be submitted for all floodproofed structures.

(4) Non-residential structures that are elevated, not flood proofed, must meet the same standards for space below the lowest floor as described in § 5.2-1(2).

(5) Applicants flood proofing non-residential buildings are advised by the terms of this Order that flood insurance premiums will be based on rates that are one (1) foot below the flood proofed level (*e.g.*, a building flood proofed to the base flood level will be rated as one foot below)

5.2-3 Manufactured Homes

(1) All manufactured homes to be placed or substantially improved on sites:

(i) Outside of a manufactured home park or subdivision,
(ii) In a new manufactured home park or subdivision,
(iii) In an expansion to an existing manufactured home park or subdivision, or
(iv) In an existing manufactured home park or subdivision on which a manufactured home has incurred "substantial damage" as the result of a flood,

shall be elevated on a permanent foundation such that the lowest floor of the manufactured home is elevated at or above the base flood elevation, plus 1 (one) foot, and be securely anchored to an adequately designed foundation system to resist flotation, collapse and lateral movement.

(2) Manufactured homes to be placed or substantially improved on sites in an existing manufactured home park or subdivision within Zones A1-30, AH and AE on the community's FIRM that are not subject to the above manufactured home provisions must be elevated so that either:

(i) The lowest floor of the manufactured home is elevated at or above the base flood elevation, plus one (1) foot, or
(ii) The manufactured home chassis is supported by reinforced piers or other foundation elements of at least equivalent strength that are no less than 36 inches in height above grade and be securely anchored to an adequately designed foundation system to resist flotation, collapse, and lateral movement.

5.2-4 Recreational Vehicles

Recreational vehicles placed on sites are required to either:

(i) Be on the site for fewer than 180 consecutive days,

(ii) Be fully licensed and ready for highway use, on its wheels or jacking system, is attached to the site only by quick disconnect type utilities and security devices, and has no permanently attached additions, or

(iii) Meet the requirements of § 5.2-3, above, and the elevation and anchoring requirements for manufactured homes.

5.3 BEFORE REGULATORY FLOODWAY

In areas where a regulatory floodway has not been designated, no new construction, substantial improvements, or other development (including fill) shall be permitted within zones A1-30 and AE on the community's FIRM, unless it is demonstrated that the cumulative effect of the proposed development, when combined with all other existing and anticipated development, will not increase the water surface elevation of the base flood more than one foot at any point within the community.

5.4 FLOODWAYS

Located within areas of special flood hazard established in § 3.2 are areas designed as floodways. Since the floodway is an extremely hazardous area due to the velocity of floodwaters which carry debris, potential projectiles, and erosion potential, the following provisions apply. The Flood Plain Manager shall:

(1) Prohibit encroachments, including fill, new construction, substantial improvements, and other development unless certification by a registered professional civil engineer is provided demonstrating through hydrologic and hydraulic analyses performed in accordance with standard engineering practice that encroachments shall not result in any increase in flood levels during occurrence of the base flood discharge.

(2) If § 5.4(1) is satisfied, all new construction and substantial improvements shall comply with all applicable flood hazard reduction provisions of § 5.0, PROVISIONS FOR FLOOD HAZARD REDUCTION.

5.4.1 COASTAL HIGH HAZARD AREA

Coastal high hazard areas (V or VE Zones) are located within the areas of special flood hazard established in Section 3.2. These areas have special flood hazards associated with high velocity waters from tidal surges and hurricane wave wash; therefore, the following provisions shall apply:

5.4.1-1 LOCATION OF STRUCTURES

[1] All buildings or structures shall be located landward of the reach of the mean high tide.

[2] The placement of manufactured homes shall be prohibited, except in an existing manufactured home park or manufactured home subdivision.

5.4.1-2 CONSTRUCTION METHODS

[1] ELEVATION

All new construction and substantial improvements shall be elevated on piling or columns so that the bottom of the lowest horizontal structural member of the lowest floor (excluding the piling or columns) is elevated to or above the base flood level PLUS ONE FOOT, with all space below the lowest floor's supporting member open so as not to impede the flow of water, except for breakaway walls as provided or in SECTION 5.4.1-2(4).

[2] STRUCTURAL SUPPORT

(i) All new construction and substantial improvements shall be securely anchored on piling or columns.

(ii) The pile or column foundation and structure attached thereto shall be anchored to resist flotation, collapse or lateral movement due to the effects of wind and water loading values each of which shall have a one percent chance of being equaled or exceeded in any given year (100-year mean recurrence interval).

(iii) There shall be no fill used for structural support.

[3] CERTIFICATION

A registered professional engineer or architect shall develop or review the structural design specifications and plans for the construction and shall certify that the design and methods of construction to be used are in accordance with accepted standards of practice for compliance with the provisions of SECTION 5.4.1-2(1) and 5.4.1-2(2) (i) and (ii).

[4] SPACE BELOW THE LOWEST FLOOR

(i) Any alteration, repair, reconstruction or improvement to a structure started after the enactment of this ordinance shall not enclose the space below the lowest floor unless breakaway walls, open wood lattice-work or insect screening are used as provided for in this section.

(ii) Breakaway walls, open wood lattice-work or insect screening shall be allowed below the base flood elevation provided that they are intended to collapse under wind and water loads without causing collapse, displacement or other structural damage to the elevated portion of the building or supporting foundation system. Breakaway walls shall be designed for a safe loading resistance of not less than 10 and no more than 20 pounds per square foot. Use of breakaway walls which exceed a design safe loading of 20 pounds per square foot (either by design or when so required by local or State codes) may be permitted only if a registered professional engineer or architect certifies that the designs proposed meet the following conditions.

(a) Breakaway wall collapse shall result from a water load less than that which would occur during the base flood and,

(b) The elevated portion of the building and supporting foundation system shall not be subject to collapse, displacement or other structural damage due to the effects of wind and water load acting simultaneously on all building components (structural and non-structural).

Water loading values used shall be those associated with the base flood. Wind loading values used shall be those required by applicable State or local building standards.

(iii) If breakaway walls are utilized, such enclosed space shall be used solely for parking of vehicles, building access, or storage and not for human habitation.

(iv) Prior to construction, plans for any breakaway wall must be submitted to the (local administrator) for approval.

5.4.1-3 SAND DUNES

There shall be no alteration of sand dunes, which would increase potential for flood damage.

5.5 STANDARDS FOR SHALLOW FLOODING AREAS (AO ZONES)

Shallow flooding areas appear on FIRMs as AO Zones with depth designations. The base flood depths in these Zones range from 1 to 3 feet above ground where a clearly defined channel does not exist, or where the path of flooding is unpredictable and where velocity flow may be evident. Such flooding is usually characterized as sheet flow. In these areas, the following provisions apply:

(1) New construction and substantial improvements of residential structures and manufactured homes within AO Zones shall have the lowest floor (including basement) elevated above the highest grade adjacent to the building, one foot or more above the depth number specified ion the FIRM (at least two feet if no depth number is specified).

(2) New construction and substantial improvements of non-residential structures within AO Zones shall either:

(i) Have the lowest floor (including basement) elevated above the highest adjacent grade of the building site, one foot or more above the depth number specified in the FIRM (at least two feet if no depth number is specified); or

(ii) Together with attendant utility and sanitary facilities, be completely flood proofed to or above that level so that any space below that level is watertight with walls substantially impermeable to the passage of water and with structural components having the capability of resisting hydrostatic and hydrodynamic loads and effects of buoyancy. If this method is used, compliance shall be certified by a registered professional engineer or architect as in § 2-2(3).

(3) Require adequate drainage paths around structures on slopes to guide floodwaters around and away from proposed structures.

(4) Recreational vehicles placed on sites within AO Zones on the community's FIRM either:

(i) Be on the site for fewer than 180 consecutive days,

(ii) Be fully licensed and ready for highway use, on its wheels or jacking system, is attached to the site only by quick disconnect type utilities and security devices, and has no permanently attached additions; or

(iii) Meet the requirements of § 5.5 above, and the elevation and anchoring requirements for manufactured homes.

5.6 CRITICAL FACILITIES

(1) Construction of any new critical facility shall be, to the extent possible, located outside the boundaries of the Special Flood Hazard Area (S.F.H.A. – 100–Year Floodplain.)

(2) The Jefferson County Floodplain Administrator may approve the construction of a new critical facility of the substantial improvement of an existing critical facility within the (S.F.H.A.) if it meets the elevation and/or flood proofing requirements of this section and the Administrator determines that it is not practical to locate or relocate the facility outside of the S.F.H.A.

~~(3) If the development permit is denied, the decision may be appealed to the~~ Commissioners as allowed § 4.4-1 herein.

(4) Critical facilities constructed or substantially improved within the S.F.H.A. shall have the lowest floor elevated five (5) feet above the 100-year base flood elevation or to an elevation of one foot above the 500-year flood plain, if such elevation has been determined.

(5) Critical facilities located within the S.F.H.A. that manufacture, process, transport, or store toxic substances should be designed to insure that toxic substances will not be displaced by or released into floodwaters.

ARTICLE 6

REPEALING ALL PREVIOUS ORDERS IN CONFLICT

All Orders previously entered by Jefferson County, which are in conflict with this Order, are hereby expressly repealed.

APPROVED: _____ _____ 7-27-09

County Judge, Ronald L. Walker Date

CERTIFICATE

I, the undersigned, Carolyn Guidry, County Clerk, do hereby certify that the above is a true and correct copy of an Order duly adopted by Jefferson County, Texas, at a regular meeting of Commissioners' Court, duly convened at the Jefferson County Courthouse, Beaumont, Texas.

Carolyn Guidry, County Clerk

7/29/09
Date

(Revised 7/23/09)

FLOODPLAIN DEVELOPMENT PERMIT APPLICATION

SECTION 1: GENERAL PROVISIONS (APPLICANT to read and sign):

1. No work may start until a permit is issued.
2. The permit may be revoked if any false statements are made herein.
3. If revoked, all work must cease until permit is re-issued.
4. Development shall not be used or occupied until a Certificate of Compliance is issued.
5. The permit will expire if no work is commenced within six months of issuance.
6. Applicant is hereby informed that other permits may be required to fulfill local, state and federal regulatory requirements.
7. Applicant hereby gives consent to the Jefferson County Floodplain Manager or his/her representative to make reasonable inspections required to verify compliance.
8. I, THE APPLICANT, CERTIFY THAT ALL STATEMENTS HEREIN AND IN ATTACHMENTS TO THIS APPLICATION ARE, TO THE BEST OF MY KNOWLEDGE, TRUE AND ACCURATE.

APPLICANT'S SIGNATURE: _____ **DATE:** _____

SECTION 2: PROPOSED DEVELOPMENT (To be completed by APPLICANT.)

NAME ADDRESS TELEPHONE

APPLICANT:

_____

_____

_____

BUILDER:

_____

_____

_____

ENGINEER:

_____

_____

_____

PROJECT LOCATION:

_____

_____

_____

To avoid delay in processing the application, please provide enough information to easily identify the project location. Provide the street address, lot number or legal description (attach) and, outside urban areas, the distance to the nearest intersecting road or well-know landmark. **A sketch attached to this application showing the project location is required.**

_____

_____

_____

_____

DESCRIPTION OF WORK (Check all applicable boxes):

A. STRUCTURAL DEVELOPMENT

ACTIVITY	STRUCTURE TYPE
☐ New Structure	☐ Residential (1-4 Family)
☐ Addition	☐ Residential (More than 4 Family)
☐ Alteration	☐ Non-Residential (Flood proofing? ☐ Yes)
☐ Relocation	☐ Combined Use (Residential & Commercial)
☐ Demolition	☐ Manufactured (Mobile) Home
☐ Replacement	☐ In Manufactured Home Park? ☐ Yes

ESTIMATED COST OF PROJECT $_____

B. OTHER DEVELOPMENT ACTIVITIES:

☐ Fill
☐ Mining
☐ Drilling
☐ Grading
☐ Excavation (Except for Structural Development Checked Above)
☐ Watercourse Alteration (Including Dredging and Channel Modifications)
☐ Drainage Improvements (Including Culvert Work)
☐ Road, Street or Bride Construction
☐ Subdivision (New or Expansion)
☐ Individual Water or Sewer System
☐ Other (Please Specify)

After completing SECTION 2, APPLICANT should submit this form to Jefferson County Floodplain Manager for review.

SECTION 3: FLOODPLAIN DETERMINATION (To be completed by Jefferson County Floodplain Manager.)

The proposed development is located on FIRM Panel No.:_____, Dated: _____

The Proposed Development:

☐ Is NOT located in a Special Flood Hazard Area (Notify the applicant that the application review is complete and NO FLOODPLAIN DEVELOPMENT PERMIT IS REQUIRED).

☐ Is located in a Special Flood Hazard Area.
FIRM zone designation is _____.
100-Year flood elevation at the site is_____ Ft. NGVD (MSL) ☐ Unavailable

☐ The proposed development is located in a floodway.
FBFM Panel No.:_____ Date: _____

☐ See Section 4 for additional instructions.

SIGNED:

_____**DATE:**_____

SECTION 4: ADDITIONAL INFORMATION REQUIRED (To be completed by Jefferson County Floodplain Manager.)

The applicant must sign the documents checked below before the application can be processed.

☐ A site plan showing the location of all existing structures, water bodies, adjacent roads, lot dimensions and proposed development.

☐ Development plans, drawn to scale, and specifications, including where applicable details for anchoring structures, proposed elevation of lowest floor (including basement), types of water resistant materials used below the first floor, details of flood proofing of utilities located below the first floor and details of enclosures below the first floor.
Also:
_____

☐ Subdivision or other development plans (If the subdivision or other developments exceeds 50 lots or 5 acres, whichever is the lesser, the applicant <u>must</u> provide 100-year flood elevations if they are not otherwise available).

☐ Plans showing the extent of watercourse relocation and/or landform alterations.

☐ Top of new fill elevation _____ Ft. NGVD (MSL).

☐ Flood proofing protection level (non-residential only) _____ Ft. NGVD (MSL). For flood proofed structures applicant must attach certification from registered engineer or architect.

☐ Certification from a registered engineer that the proposed activity in a regulatory floodway will not result in <u>any</u> increase in the height of the 100-year flood. A copy of all data and calculations supporting this finding must also be submitted.
☐ No-Risk Certification
☐ Other:

_____

_____

_____

SECTION 5: PERMIT DETERMINATION (To be completed by Jefferson County Floodplain Manager.)

I have determined that the proposed activity: **(A)** ☐ **Is**; **(B)** ☐ **Is Not** in conference with provisions of the Jefferson County Flood Prevention Order. The permit is issued subject to the conditions attached to and made part of this permit.

SIGNED: _____ DATE: _____

If BOX A is checked, the Jefferson County Floodplain Manager may issue a Development Permit.
If BOX B is checked, the Jefferson County Floodplain Manager will provide a written summary of deficiencies. Applicant may revise and resubmit an application to the Floodplain Manager or may request a hearing from the Commissioners' Court in accordance with the requirements of the Jefferson County Flood Prevention Order.

APPEALS: Appealed to Commissioners' Court: ☐ Yes ☐ No
Hearing date: _____
Commissioners' Court Decision - Approved: ☐ Yes ☐ No

Conditions:

_____

_____

_____

SECTION 6: AS-BUILT ELEVATIONS (To be submitted by APPLICANT before Certificate of Compliance is issued.)

The following information must be provided for projects/structures. The section must be completed by a registered professional engineer or a licensed land surveyor (or attach a certification to this application).
Complete 1 or 2 below:

1. Actual (As-Built) Elevation of the top of the lowest floor, including basement (in Coastal High Hazard Areas) bottom of lowest structural member of the lowest floor, excluding piling and columns) is: _____ FT. NGVD (MSL).
2. Actual (As-Built) Elevation of flood proofing protection is _____FT. NGVD (MSL).

NOTE: Any work performed prior to submittal of the above information is at the risk of the Applicant.

SECTION 7: COMPLIANCE ACTION (To be completed by JEFFERSON COUNTY FLOODPLAIN MANAGER).

The Jefferson County Floodplain Manager will complete this section as applicable based on inspection of the project or review of documentation provided by Professional Land Surveyor and/or Professional Engineers on behalf of property owner/developer, to ensure compliance with the County's Flood Prevention Order.

INSPECTIONS/REVIEWS:

DATE: _____ BY: _____ DEFICIENCIES? ☐ Yes ☐ No
DATE: _____ BY: _____ DEFICIENCIES? ☐ Yes ☐ No
DATE: _____ BY: _____ DEFICIENCIES? ☐ Yes ☐ No

SECTION 8: CERTIFICATE OF COMPLIANCE (To be completed by JEFFERSON COUNTY FLOODPLAIN MANAGER.)

Certificate of Compliance issued: DATE: _____ BY: _____

FEMA

NATIONAL FLOOD INSURANCE PROGRAM

ELEVATION CERTIFICATE

AND

INSTRUCTIONS

NATIONAL FLOOD INSURANCE PROGRAM
ELEVATION CERTIFICATE

PAPERWORK REDUCTION ACT NOTICE

Public reporting burden for the Elevation Certificate is estimated to average 3.5 hours per response. Burden means the time, effort, or financial resources expended by persons to generate, maintain, retain, disclose, or provide information to the Federal Emergency Management Agency (FEMA). You are not required to respond to the collection of information unless a valid OMB control number is displayed in the upper right corner of the form. You may send comments regarding the accuracy of the burden estimate and any suggestions for reducing the burden to: U.S. Department of Homeland Security, Federal Emergency Management Agency, Mitigation Division, 500 C Street SW, Washington DC 20472, Paperwork Reduction Project (1660-0008). **NOTE: Do not send your completed form to this address.** To obtain or retain benefits under the National Flood Insurance Program (NFIP), you must respond to this collection of information.

PURPOSE OF THE ELEVATION CERTIFICATE

The Elevation Certificate is an important administrative tool of the National Flood Insurance Program (NFIP). It is to be used to provide elevation information necessary to ensure compliance with community floodplain management ordinances, to determine the proper insurance premium rate, and to support a request for a Letter of Map Amendment (LOMA) or Letter of Map Revision based on fill (LOMR-F).

The Elevation Certificate is required in order to properly rate post-FIRM buildings, which are buildings constructed after publication of the Flood Insurance Rate Map (FIRM), located in flood insurance Zones A1-A30, AE, AH, A (with BFE), VE, V1-V30, V (with BFE), AR, AR/A, AR/AE, AR/A1-A30, AR/AH, and AR/AO. The Elevation Certificate is not required for pre-FIRM buildings unless the building is being rated under the optional post-FIRM flood insurance rules.

As part of the agreement for making flood insurance available in a community, the NFIP requires the community to adopt a floodplain management ordinance that specifies minimum requirements for reducing flood losses. One such requirement is for the community to obtain the elevation of the lowest floor (including basement) of all new and substantially improved buildings, and maintain a record of such information. The Elevation Certificate provides a way for a community to document compliance with the community's floodplain management ordinance.

Use of this certificate does not provide a waiver of the flood insurance purchase requirement. Only a LOMA or LOMR-F from the Federal Emergency Management Agency (FEMA) can amend the FIRM and remove the Federal mandate for a lending institution to require the purchase of flood insurance. However, the lending institution has the option of requiring flood insurance even if a LOMA/LOMR-F has been issued by FEMA. The Elevation Certificate may be used to support a LOMA or LOMR-F request. Lowest floor and lowest adjacent grade elevations certified by a surveyor or engineer will be required if the certificate is used to support a LOMA or LOMR-F request. A LOMA or LOMR-F request must be submitted with either a completed FEMA MT-EZ or MT-1 package, whichever is appropriate.

This certificate is used only to certify building elevations. A separate certificate is required for floodproofing. Under the NFIP, non-residential buildings can be floodproofed up to or above the Base Flood Elevation (BFE). A floodproofed building is a building that has been designed and constructed to be watertight (substantially impermeable to floodwaters) below the BFE. Floodproofing of residential buildings is not permitted under the NFIP unless FEMA has granted the community an exception for residential floodproofed basements. The community must adopt standards for design and construction of floodproofed basements before FEMA will grant a basement exception. For both floodproofed non-residential buildings and residential floodproofed basements in communities that have been granted an exception by FEMA, a floodproofing certificate is required.

Additional guidance can be found in the FEMA Floodplain Management Bulletin about using the Elevation Certificate, available on FEMA's website at www.fema.gov/fima/fpmbul.shtm. Click on "FEMA 467-1 Elevation Certificate Cover and Bulletin."

U.S. DEPARTMENT OF HOMELAND SECURITY
Federal Emergency Management Agency
National Flood Insurance Program

ELEVATION CERTIFICATE

OMB No. 1660-0008
Expires February 28, 2009

Important: Read the instructions on pages 1-8.

SECTION A - PROPERTY INFORMATION

For Insurance Company Use:
Policy Number
Company NAIC Number

A1. Building Owner's Name

A2. Building Street Address (including Apt., Unit, Suite, and/or Bldg. No.) or P.O. Route and Box No.

City State ZIP Code

A3. Property Description (Lot and Block Numbers, Tax Parcel Number, Legal Description, etc.)

A4. Building Use (e.g., Residential, Non-Residential, Addition, Accessory, etc.) _____

A5. Latitude/Longitude: Lat. _____ Long. _____ Horizontal Datum: ☐ NAD 1927 ☐ NAD 1983

A6. Attach at least 2 photographs of the building if the Certificate is being used to obtain flood insurance.

A7. Building Diagram Number_____

A8. For a building with a crawl space or enclosure(s), provide:
a) Square footage of crawl space or enclosure(s) _____ sq ft
b) No. of permanent flood openings in the crawl space or enclosure(s) walls within 1.0 foot above adjacent grade _____
c) Total net area of flood openings in A8.b _____ sq in

A9. For a building with an attached garage, provide:
a) Square footage of attached garage _____ sq ft
b) No. of permanent flood openings in the attached garage walls within 1.0 foot above adjacent grade _____
c) Total net area of flood openings in A9.b _____ sq in

SECTION B - FLOOD INSURANCE RATE MAP (FIRM) INFORMATION

B1. NFIP Community Name & Community Number	B2. County Name	B3. State

B4. Map/Panel Number	B5. Suffix	B6. FIRM Index Date	B7. FIRM Panel Effective/Revised Date	B8. Flood Zone(s)	B9. Base Flood Elevation(s) (Zone AO, use base flood depth)

B10. Indicate the source of the Base Flood Elevation (BFE) data or base flood depth entered in Item B9.
☐ FIS Profile ☐ FIRM ☐ Community Determined ☐ Other (Describe) _____

B11. Indicate elevation datum used for BFE in Item B9: ☐ NGVD 1929 ☐ NAVD 1988 ☐ Other (Describe) _____

B12. Is the building located in a Coastal Barrier Resources System (CBRS) area or Otherwise Protected Area (OPA)? ☐ Yes ☐ No
Designation Date_____ ☐ CBRS ☐ OPA

SECTION C - BUILDING ELEVATION INFORMATION (SURVEY REQUIRED)

C1. Building elevations are based on: ☐ Construction Drawings* ☐ Building Under Construction* ☐ Finished Construction
*A new Elevation Certificate will be required when construction of the building is complete.

C2. Elevations – Zones A1-A30, AE, AH, A (with BFE), VE, V1-V30, V (with BFE), AR, AR/A, AR/AE, AR/A1-A30, AR/AH, AR/AO. Complete items C2.a-g below according to the building diagram specified in Item A7.

Benchmark Utilized _____ Vertical Datum _____

Conversion/Comments _____

Check the measurement used.

a)	Top of bottom floor (including basement, crawl space, or enclosure floor)	_____.____ ☐ feet	☐ meters (Puerto Rico only)
b)	Top of the next higher floor	_____.____ ☐ feet	☐ meters (Puerto Rico only)
c)	Bottom of the lowest horizontal structural member (V Zones only)	_____.____ ☐ feet	☐ meters (Puerto Rico only)
d)	Attached garage (top of slab)	_____.____ ☐ feet	☐ meters (Puerto Rico only)
e)	Lowest elevation of machinery or equipment servicing the building (Describe type of equipment in Comments)	_____.____ ☐ feet	☐ meters (Puerto Rico only)
f)	Lowest adjacent (finished) grade (LAG)	_____.____ ☐ feet	☐ meters (Puerto Rico only)
g)	Highest adjacent (finished) grade (HAG)	_____.____ ☐ feet	☐ meters (Puerto Rico only)

SECTION D - SURVEYOR, ENGINEER, OR ARCHITECT CERTIFICATION

This certification is to be signed and sealed by a land surveyor, engineer, or architect authorized by law to certify elevation information. *I certify that the information on this Certificate represents my best efforts to interpret the data available. I understand that any false statement may be punishable by fine or imprisonment under 18 U.S. Code, Section 1001.*

☐ Check here if comments are provided on back of form.

Certifier's Name License Number

Title Company Name

Address City State ZIP Code

Signature Date Telephone

IMPORTANT: In these spaces, copy the corresponding information from Section A.			For Insurance Company Use:
Building Street Address (including Apt., Unit, Suite, and/or Bldg. No.) or P.O. Route and Box No.			Policy Number
City	State	ZIP Code	Company NAIC Number

SECTION D - SURVEYOR, ENGINEER, OR ARCHITECT CERTIFICATION (CONTINUED)

Copy both sides of this Elevation Certificate for (1) community official, (2) insurance agent/company, and (3) building owner.

Comments

Signature Date

☐ Check here if attachments

SECTION E - BUILDING ELEVATION INFORMATION (SURVEY NOT REQUIRED) FOR ZONE AO AND ZONE A (WITHOUT BFE)

For Zones AO and A (without BFE), complete Items E1-E5. If the Certificate is intended to support a LOMA or LOMR-F request, complete Sections A, B, and C. For Items E1-E4, use natural grade, if available. Check the measurement used. In Puerto Rico only, enter meters.

E1. Provide elevation information for the following and check the appropriate boxes to show whether the elevation is above or below the highest adjacent grade (HAG) and the lowest adjacent grade (LAG).
a) Top of bottom floor (including basement, crawl space, or enclosure) is _____.____ ☐ feet ☐ meters ☐ above or ☐ below the HAG.
b) Top of bottom floor (including basement, crawl space, or enclosure) is _____.____ ☐ feet ☐ meters ☐ above or ☐ below the LAG.

E2. For Building Diagrams 6-8 with permanent flood openings provided in Section A Items 8 and/or 9 (see page 8 of instructions), the next higher floor (elevation C2.b in the diagrams) of the building is _____.____ ☐ feet ☐ meters ☐ above or ☐ below the HAG.

E3. Attached garage (top of slab) is _____.____ ☐ feet ☐ meters ☐ above or ☐ below the HAG.

E4. Top of platform of machinery and/or equipment servicing the building is _____.____ ☐ feet ☐ meters ☐ above or ☐ below the HAG.

E5. Zone AO only: If no flood depth number is available, is the top of the bottom floor elevated in accordance with the community's floodplain management ordinance? ☐ Yes ☐ No ☐ Unknown. The local official must certify this information in Section G.

SECTION F - PROPERTY OWNER (OR OWNER'S REPRESENTATIVE) CERTIFICATION

The property owner or owner's authorized representative who completes Sections A, B, and E for Zone A (without a FEMA-issued or community-issued BFE) or Zone AO must sign here. *The statements in Sections A, B, and E are correct to the best of my knowledge.*

Property Owner's or Owner's Authorized Representative's Name

Address City State ZIP Code

Signature Date Telephone

Comments

☐ Check here if attachments

SECTION G - COMMUNITY INFORMATION (OPTIONAL)

The local official who is authorized by law or ordinance to administer the community's floodplain management ordinance can complete Sections A, B, C (or E), and G of this Elevation Certificate. Complete the applicable item(s) and sign below. Check the measurement used in Items G8. and G9.

G1. ☐ The information in Section C was taken from other documentation that has been signed and sealed by a licensed surveyor, engineer, or architect who is authorized by law to certify elevation information. (Indicate the source and date of the elevation data in the Comments area below.)

G2. ☐ A community official completed Section E for a building located in Zone A (without a FEMA-issued or community-issued BFE) or Zone AO.

G3. ☐ The following information (Items G4.-G9.) is provided for community floodplain management purposes.

G4. Permit Number	G5. Date Permit Issued	G6. Date Certificate Of Compliance/Occupancy Issued

G7. This permit has been issued for: ☐ New Construction ☐ Substantial Improvement

G8. Elevation of as-built lowest floor (including basement) of the building: _____.____ ☐ feet ☐ meters (PR) Datum_____

G9. BFE or (in Zone AO) depth of flooding at the building site: _____.____ ☐ feet ☐ meters (PR) Datum_____

Local Official's Name Title

Community Name Telephone

Signature Date

Comments

☐ Check here if attachments

Building Photographs

See Instructions for Item A6.

Building Street Address (including Apt., Unit, Suite, and/or Bldg. No.) or P.O. Route and Box No.			For Insurance Company Use: Policy Number
City	State	ZIP Code	Company NAIC Number

If using the Elevation Certificate to obtain NFIP flood insurance, affix at least two building photographs below according to the Instructions for Item A6. Identify all photographs with: date taken; "Front View" and "Rear View"; and, if required, "Right Side View" and "Left Side View." If submitting more photographs than will fit on this page, use the Continuation Page, following.

Building Photographs

Continuation Page

			For Insurance Company Use:
Building Street Address (including Apt., Unit, Suite, and/or Bldg. No.) or P.O. Route and Box No.			Policy Number
City	State	ZIP Code	Company NAIC Number

If submitting more photographs than will fit on the preceding page, affix the additional photographs below. Identify all photographs with: date taken; "Front View" and "Rear View"; and, if required, "Right Side View" and "Left Side View."

INSTRUCTIONS FOR COMPLETING THE ELEVATION CERTIFICATE

The Elevation Certificate is to be completed by a land surveyor, engineer, or architect who is authorized by law to certify elevation information when elevation information is required for Zones A1-A30, AE, AH, A (with BFE), VE, V1-V30, V (with BFE), AR, AR/A, AR/AE, AR/A1-A30, AR/AH, or AR/AO. Community officials who are authorized by law or ordinance to provide floodplain management information may also complete this form. For Zones AO and A (without BFE), a community official, a property owner, or an owner's representative may provide information on this certificate, unless the elevations are intended for use in supporting a request for a LOMA or LOMR-F. Certified elevations must be included if the purpose of completing the Elevation Certificate is to obtain a LOMA or LOMR-F.

The property owner, the owner's representative, or local official who is authorized by law to administer the community floodplain ordinance can complete Section A and Section B. The partially completed form can then be given to the land surveyor, engineer, or architect to complete Section C. The land surveyor, engineer, or architect should verify the information provided by the property owner or owner's representative to ensure that this certificate is complete.

In Puerto Rico only, elevations for building information and flood hazard information may be entered in meters.

SECTION A – PROPERTY INFORMATION

Items A1.-A4. This section identifies the building, its location, and its owner. Enter the name(s) of the building owner(s), the building's complete street address, and the lot and block numbers. If the building's address is different from the owner's address, enter the address of the building being certified. If the address is a rural route or a Post Office box number, enter the lot and block numbers, the tax parcel number, the legal description, or an abbreviated location description based on distance and direction from a fixed point of reference. For the purposes of this certificate, "building" means both a building and a manufactured (mobile) home.

A map may be attached to this certificate to show the location of the building on the property. A tax map, FIRM, or detailed community map is appropriate. If no map is available, provide a sketch of the property location, and the location of the building on the property. Include appropriate landmarks such as nearby roads, intersections, and bodies of water. For building use, indicate whether the building is residential, non-residential, an addition to an existing residential or non-residential building, an accessory building (e.g., garage), or other type of structure. Use the Comments area of the appropriate section if needed, or attach additional comments.

Item A5. Provide latitude and longitude coordinates for the center of the front of the building. Use either decimal degrees (e.g., 39.5043°, -110.7585°) or degrees, minutes, seconds (e.g., 39° 30' 15.5", -110° 45' 30.7") format. If decimal degrees are used, provide coordinates to at least 4 decimal places or better. When using degrees, minutes, seconds, provide seconds to at least 1 decimal place or better. The latitude and longitude coordinates must be accurate within 66 feet. If the Elevation Certificate is being certified by other than a licensed surveyor, engineer, or architect, this information is not required. Provide the type of datum used to obtain the latitude and longitude. FEMA prefers the use of NAD 1983.

Item A6. If the Elevation Certificate is being used to obtain flood insurance through the NFIP, the certifier must provide at least two photographs showing the front and rear of the building taken within 90 days from the date of certification. The photographs must be taken with views confirming the building description and diagram number provided in Section A. If the building has split-level or multi-level areas, provide at least two additional photographs showing side views of the building. All photographs must be in color and measure at least 3"x3". Digital photographs are acceptable.

Item A7. Select the diagram on pages 7-8 that best represents the building. Then enter the diagram number and use the diagram to identify and determine the appropriate elevations requested in Items C2.a-g. If you are unsure of the correct diagram, select the diagram that most closely resembles the building being certified.

Item A8.a Provide the square footage of the crawl space or enclosure(s) below the lowest elevated floor of an elevated building with or without permanent flood openings. Take the measurement from the outside of the crawl space or enclosure(s). Examples of elevated buildings constructed with crawl space and enclosure(s) are shown in Diagrams 6-8 on page 8. Diagram 2 or 4 should be used for a building constructed with a crawl space floor that is below the exterior grade on all sides.

Items A8.b-c Enter in Item A8.b the number of permanent flood openings in the crawl space or enclosure(s) walls that are no higher than 1.0 foot above the adjacent grade. Estimate the total net area of all such permanent flood openings in square inches, excluding any bars, louvers, or other covers of the permanent flood openings, and enter the total in Item A8.c. If the net

area cannot be reasonably estimated, provide the size of the flood openings without consideration of any covers and indicate in the Comments area the type of cover that exists in the flood openings. If the crawl space or enclosure(s) walls have no permanent openings within 1.0 foot above adjacent grade, enter "0" (zero) in Items A8.b-c.

Item A9.a Provide the square footage of the attached garage with or without permanent flood openings. Take the measurement from the outside of the garage.

Items A9.b-c Enter in Item A9.b the number of permanent flood openings in the attached garage that are no higher than 1.0 foot above the adjacent grade. This includes any openings that are in the garage door that are no higher than 1.0 foot above the adjacent grade. Estimate the total net area of all such permanent flood openings in square inches and enter the total in Item A9.c. If the garage has no permanent flood openings within 1.0 foot above adjacent grade, enter "0" (zero) in Items A9.b-c.

SECTION B - FLOOD INSURANCE RATE MAP (FIRM) INFORMATION

Complete the Elevation Certificate on the basis of the FIRM in effect at the time of the certification.

The information for Section B is obtained by reviewing the FIRM panel that includes the building's location. Information about the current FIRM is available from the Federal Emergency Management Agency (FEMA) by calling 1-800-358-9616. If a Letter of Map Amendment (LOMA) or Letter of Map Revision (LOMR-F) has been issued by FEMA, please provide the letter date and case number in the Comments area of Section D or Section G, as appropriate.

For a building in an area that has been annexed by one community but is shown on another community's FIRM, enter the community name and 6-digit number of the annexing community in Item B1, the name of the new county in Item B2, and the FIRM index date for the annexing community in Item B6. Enter information from the actual FIRM panel that shows the building location, even if it is the FIRM for the previous jurisdiction, in Items B4, B5, B7, B8, and B9.

Item B1. NFIP Community Name & Community Number. Enter the complete name of the community in which the building is located and the associated 6-digit community number. For a newly incorporated community, use the name and 6-digit number of the new community. Under the NFIP, a "community" is any State or area or political subdivision thereof, or any Indian tribe or authorized native organization, that has authority to adopt and enforce floodplain management regulations for the areas within its jurisdiction. To determine the current community number, see the NFIP *Community Status Book*, available on FEMA's web site at http://www.fema.gov/fema/csb.shtm, or call 1-800-358-9616.

Item B2. County Name. Enter the name of the county or counties in which the community is located. For an unincorporated area of a county, enter "unincorporated area." For an independent city, enter "independent city."

Item B3. State. Enter the 2-letter state abbreviation (for example, VA, TX, CA).

Items B4.-B5. Map/Panel Number and Suffix. Enter the 10-character "Map Number" or "Community Panel Number" shown on the FIRM where the building or manufactured (mobile) home is located. For maps in a county-wide format, the sixth character of the "Map Number" is the letter "C" followed by a four-digit map number. For maps not in a county-wide format, enter the "Community Panel Number" shown on the FIRM.

Item B6. FIRM Index Date. Enter the effective date or the map revised date shown on the FIRM Index.

Item B7. FIRM Panel Effective/Revised Date. Enter the map effective date or the map revised date shown on the FIRM panel. This will be the latest of all dates shown on the map. The current FIRM panel effective date can be determined by calling 1-800-358-9616.

Item B8. Flood Zone(s). Enter the flood zone, or flood zones, in which the building is located. All flood zones containing the letter "A" or "V" are considered Special Flood Hazard Areas. The flood zones are A, AE, A1-A30, V, VE, V1-V30, AH, AO, AR, AR/A, AR/AE, AR/A1-A30, AR/AH, and AR/AO. Each flood zone is defined in the legend of the FIRM panel on which it appears.

Item B9. Base Flood Elevation(s). Using the appropriate Flood Insurance Study (FIS) Profile, Floodway Data Table, or FIRM panel, locate the property and enter the BFE (or base flood depth) of the building site. If the building is located in more than one flood zone in Item B8, list all appropriate BFEs in Item B9. BFEs are shown on a FIRM or FIS Profile for Zones A1-A30, AE, AH, V1-V30, VE, AR, AR/A, AR/AE, AR/A1-A30, AR/AH, and AR/AO; flood depth numbers are shown for Zone AO. Use the AR BFE if the building is located in any of Zones AR/A, AR/AE, AR/A1-A30, AR/AH, or AR/AO. In A or V zones where BFEs are not provided on the FIRM, BFEs may be available from another source. For example, the community may have established BFEs or obtained BFE data from other sources for the building site. For subdivisions and other developments of more than 50 lots or 5 acres, establishment of BFEs is required by the community's floodplain management ordinance. If a BFE is obtained from another source, enter the BFE in Item B9. In an A Zone where BFEs are not available, complete Section E and enter N/A for Section B, Item B9. Enter the BFE to the nearest tenth of a foot (nearest tenth of a meter, in Puerto Rico).

Item B10. Indicate the source of the BFE that you entered in Item B9. If the BFE is from a source other than FIS Profile, FIRM, or community, describe the source of the BFE.

Item B11. Indicate the elevation datum to which the elevations on the applicable FIRM are referenced as shown on the map legend. The vertical datum is shown in the Map Legend and/or the Notes to Users on the FIRM.

Item B12. Indicate whether the building is located in a Coastal Barrier Resources System (CBRS) area or Otherwise Protected Area (OPA). (OPAs are portions of coastal barriers that are owned by Federal, State, or local governments or by certain non-profit organizations and used primarily for natural resources protection.) Federal flood insurance is prohibited in designated CBRS areas or OPAs for buildings or manufactured (mobile) homes built or substantially improved after the date of the CBRS or OPA designation. For the first CBRS designations, that date is October 1, 1983. An information sheet explaining CBRS areas and OPAs may be obtained on FEMA's web site at http://www.fema.gov/fhm/fme_cbrs.shtm.

SECTION C - BUILDING ELEVATION INFORMATION (SURVEY REQUIRED)

Complete Section C if the building is located in any of Zones A1-A30, AE, AH, A (with BFE), VE, V1-V30, V (with BFE), AR, AR/A, AR/AE, AR/A1-A30, AR/AH, or AR/AO, or if this certificate is being used to support a request for a LOMA or LOMR-F. If the building is located in Zone AO or Zone A (without BFE), complete Section E instead. To ensure that all required elevations are obtained, it may be necessary to enter the building (for instance, if the building has a basement or sunken living room, split-level construction, or machinery and equipment).

Surveyors may not be able to gain access to some crawl spaces to shoot the elevation of the crawl space floor. If access to the crawl space is limited or cannot be gained, follow one of these procedures.

- Use a yardstick or tape measure to measure the height from the floor of the crawl space to the "next higher floor," and then subtract the crawl space height from the elevation of the "next higher floor." If there is no access to the crawl space, use the exterior grade next to the structure to measure the height of the crawl space to the "next higher floor."
- Contact the local floodplain administrator of the community in which the building is located. The community may have documentation of the elevation of the crawl space floor as part of the permit issued for the building.
- If the property owner has documentation or knows the height of the crawl space floor to the next higher floor, try to verify this by looking inside the crawl space through any openings or vents.

In all three cases, provide the elevation in the Comments area of Section D on the back of the form and a brief description of how the elevation was obtained.

Item C1. Indicate whether the elevations to be entered in this section are based on construction drawings, a building under construction, or finished construction. For either of the first two choices, a post-construction Elevation Certificate will be required when construction is complete. If the building is under construction, include only those elevations that can be surveyed in Items C2.a-g. Use the Comments area of Section D to provide elevations obtained from the construction plans or drawings. Select "Finished Construction" only when all machinery and/or equipment such as furnaces, hot water heaters, heat pumps, air conditioners, and elevators and their associated equipment have been installed and the grading around the building is completed.

Item C2. A field survey is required for Items C2.a-g. Provide the benchmark utilized, the vertical datum for that benchmark, and any datum conversion necessary. Most control networks will assign a unique identifier for each benchmark. For example, the National Geodetic Survey uses the Permanent Identifier (PID). For the benchmark utilized, provide the PID or other

unique identifier assigned by the maintainer of the benchmark. Also provide the vertical datum for the benchmark elevation. Show the conversion from the field survey datum used if it differs from the datum used for the BFE entered in Item B9 and indicate the conversion software used. All elevations for the certificate, including the elevations for Items C2.a-g, must be referenced to the datum on which the BFE is based. Show the datum conversion, if applicable, in this section or in the Comments area of Section D. For property experiencing ground subsidence, the most recent reference mark elevations must be used for determining building elevations. However, when subsidence is involved, the BFE should not be adjusted. Enter elevations in Items C2.a-g to the nearest tenth of a foot (nearest tenth of a meter, in Puerto Rico).

Items C2.a-d Enter the building elevations (excluding the attached garage) indicated by the selected building diagram (Item A7.) in Items C2.a-c. If there is an attached garage, enter the elevation for top of attached garage slab in Item C2.d. (Because elevation for top of attached garage slab is self-explanatory, attached garages are not illustrated in the diagrams.) If the building is located in a V zone on the FIRM, complete Item C2.c. If the flood zone cannot be determined, enter elevations for all of Items C2.a-g. For buildings in A zones, elevations a, b, d, and e should be measured at the top of the floor. For buildings in V zones, elevation c must be measured at the bottom of the lowest horizontal structural member of the floor (see drawing below). For buildings elevated on a crawl space, Diagram 8, enter the elevation of the top of the crawl space floor in Item C2.a, whether or not the crawl space has permanent flood openings (flood vents). *If any item does not apply to the building, enter "N/A" for not applicable.*

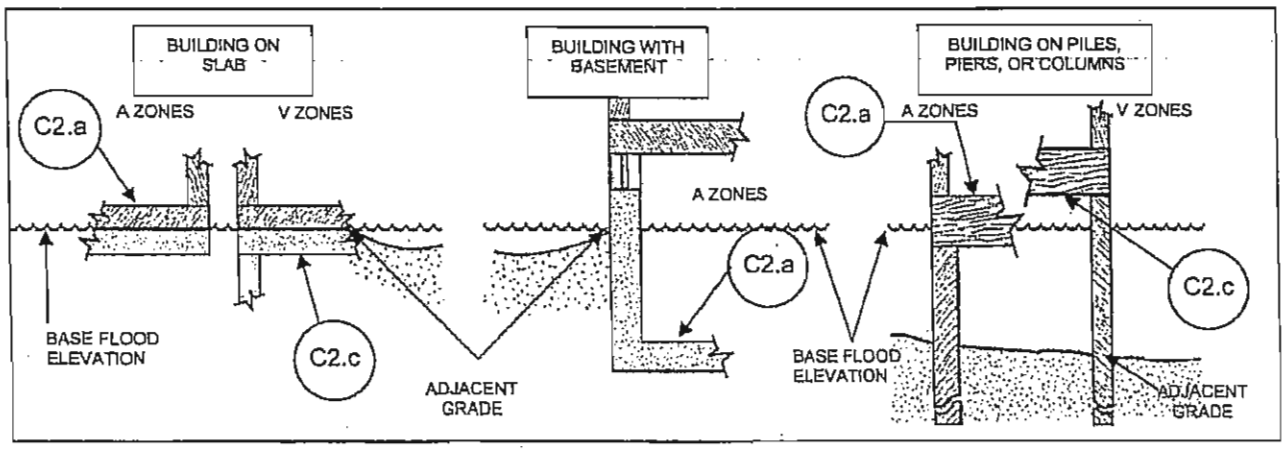

Item C2.e Enter the lowest platform elevation of at least one of the following machinery and equipment items: elevators and their associated equipment, furnaces, hot water heaters, heat pumps, and air conditioners in an attached garage or enclosure or on an open utility platform that provides utility services for the building. Note that elevations for these specific machinery and equipment items are required in order to rate the building for flood insurance. Local floodplain management officials are required to ensure that all machinery and equipment servicing the building are protected from flooding. Thus, local officials may require that elevation information for all machinery and equipment, including ductwork, be documented on the Elevation Certificate. If the machinery and/or equipment is mounted to a wall, pile, etc., enter the platform elevation of the machinery and/or equipment. Indicate machinery/equipment type in the Comments area of Section D or Section G, as appropriate. *If this item does not apply to the building, enter "N/A" for not applicable.*

Items C2.f-g Adjacent grade is defined as the elevation of the ground, sidewalk, patio slab, or deck support immediately next to the building. If the certificate is to be used to support a request for a LOMA or LOMR-F, provide in the Comments area the lowest adjacent grade elevation measured at the deck support or stairs if that elevation is lower than the building's lowest adjacent grade. For Zone AO, use the natural grade elevation, if available. This measurement must be to the nearest tenth of a foot (nearest tenth of a meter, in Puerto Rico) if this certificate is being used to support a request for a LOMA or LOMR-F.

SECTION D - SURVEYOR, ENGINEER, OR ARCHITECT CERTIFICATION

Complete as indicated. This section of the Elevation Certificate may be signed by only a land surveyor, engineer, or architect who is authorized by law to certify elevation information. Place your license number, your seal (as allowed by the State licensing board), your signature, and the date in the box in Section D. You are certifying that the information on this certificate represents your best efforts to interpret the data available and that you understand that any false statement may be punishable

by fine or imprisonment under 18 U.S. Code, Section 1001. Use the Comments area of Section D, on the back of the certificate, to provide datum, elevation, or other relevant information not specified on the front.

SECTION E - BUILDING ELEVATION INFORMATION (SURVEY NOT REQUIRED) FOR ZONE AO & ZONE A (WITHOUT BFE)

Complete Section E if the building is located in Zone AO or Zone A (without BFE). Otherwise, complete Section C instead. Explain in the Section F Comments area if the measurement provided under Items E1.- E4. is based on the "natural grade."

Items E1.a and b Enter in Item E1.a the height to the nearest tenth of a foot (tenth of a meter in Puerto Rico) of the top of the bottom floor (as indicated in the applicable diagram) above or below the highest adjacent grade (HAG). Enter in Item E1.b the height to the nearest tenth of a foot (tenth of a meter in Puerto Rico) of the top of the bottom floor (as indicated in the applicable diagram) above or below the lowest adjacent grade (LAG). For buildings in Zone AO, the community's floodplain management ordinance requires the lowest floor of the building be elevated above the highest adjacent grade at least as high as the depth number on the FIRM. Buildings in Zone A (without BFE) may qualify for a lower insurance rate if an engineered BFE is developed at the site.

Item E2. For Building Diagrams 6-8 with permanent flood openings (see page 8), enter the height to the nearest tenth of a foot (tenth of a meter in Puerto Rico) of the next higher floor or elevated floor (as indicated in the applicable diagram) above or below the highest adjacent grade (HAG).

Item E3. Enter the height to the nearest tenth of a foot (tenth of a meter in Puerto Rico), in relation to the highest adjacent grade next to the building, for the top of attached garage slab. (Because elevation for top of attached garage slab is self-explanatory, attached garages are not illustrated in the diagrams.) *If this item does not apply to the building, enter "N/A" for not applicable.*

Item E4. Enter the height to the nearest tenth of a foot (tenth of a meter in Puerto Rico), in relation to the highest adjacent grade next to the building, of the platform elevation that supports the machinery and/or equipment servicing the building. Indicate machinery/equipment type in the Comments area of Section F. *If this item does not apply to the building, enter "N/A" for not applicable.*

Item E5. For those communities where this base flood depth is not available, the community will need to determine whether the top of the bottom floor is elevated in accordance with the community's floodplain management ordinance.

SECTION F - PROPERTY OWNER (OR OWNER'S REPRESENTATIVE) CERTIFICATION

Complete as indicated. This section is provided for certification of measurements taken by a property owner or property owner's representative when responding to Sections A, B, and E. The address entered in this section must be the actual mailing address of the property owner or property owner's representative who provided the information on the certificate.

SECTION G - COMMUNITY INFORMATION (OPTIONAL)

Complete as indicated. The community official who is authorized by law or ordinance to administer the community's floodplain management ordinance can complete Sections A, B, C (or E), and G of this Elevation Certificate. Section C may be filled in by the local official as provided in the instructions below for Item G1. If the authorized community official completes Sections C, E, or G, complete the appropriate item(s) and sign this section.

Check **Item G1.** if Section C is completed with elevation data from other documentation, including elevations obtained from the Community Rating System Elevation Software, that has been signed and sealed by a licensed surveyor, engineer, or architect who is authorized by law to certify elevation information. Indicate the source of the elevation data and the date obtained in the Comments area of Section G. If you are both a community official and a licensed land surveyor, engineer, or architect authorized by law to certify elevation information, and you performed the actual survey for a building in Zones A1-A30, AE, AH, A (with BFE), VE, V1-V30, V (with BFE), AR, AR/A, AR/A1-A30, AR/AE, AR/AH, or AR/AO, you must also complete Section D.

Check **Item G2.** if information is entered in Section E by the community for a building in Zone A (without a FEMA-issued or community-issued BFE) or Zone AO.

Check **Item G3.** if the information in Items G4.-G9. has been completed for community floodplain management purposes to document the as-built lowest floor elevation of the building. Section C of the Elevation Certificate records the elevation of various building components but does not determine the lowest floor of the building or whether the building, as constructed, complies with the community's floodplain management ordinance. This must be done by the community. Items G4.-G9. provide a way to document these determinations.

Item G4. Permit Number. Enter the permit number or other identifier to key the Elevation Certificate to the permit issued for the building.

Item G5. Date Permit Issued. Enter the date the permit was issued for the building.

Item G6. Date Certificate of Compliance/Occupancy Issued. Enter the date that the Certificate of Compliance or Occupancy or similar written official documentation of as-built lowest floor elevation was issued by the community as evidence that all work authorized by the floodplain development permit has been completed in accordance with the community's floodplain management laws or ordinances.

Item G7. New Construction or Substantial Improvement. Check the applicable box. "Substantial Improvement" means any reconstruction, rehabilitation, addition, or other improvement of a building, the cost of which equals or exceeds 50 percent of the market value of the building before the start of construction of the improvement. The term includes buildings that have incurred substantial damage, regardless of the actual repair work performed.

Item G8. As-built lowest floor elevation. Enter the elevation of the lowest floor (including basement) when the construction of the building is completed and a final inspection has been made to confirm that the building is built in accordance with the permit, the approved plans, and the community's floodplain management laws or ordinances. Indicate the elevation datum used.

Item G9. BFE. Using the appropriate FIRM panel, FIS Profile, or other data source, locate the property and enter the BFE (or base flood depth) of the building site. Indicate the elevation datum used.

Enter your name, title, and telephone number, and the name of the community. Sign and enter the date in the appropriate blanks.

BUILDING DIAGRAMS

The following eight diagrams illustrate various types of buildings. Compare the features of the building being certified with the features shown in the diagrams and select the diagram most applicable. Enter the diagram number in Item A7., the square footage of crawl space or enclosure(s) and the area of flood openings in square inches in Items A8.a-c, the square footage of attached garage and the area of flood openings in square inches in Items A9.a-c, and the elevations in Items C2.a-g.

In A zones, the floor elevation is taken at the top finished surface of the floor indicated; in V zones, the floor elevation is taken at the bottom of the lowest horizontal structural member (see drawing in instructions for Section C).

DIAGRAM 1

All slab-on-grade single- and multiple-floor buildings (other than split-level) and high-rise buildings, either detached or row type (e.g., townhouses); with or without attached garage.

Distinguishing Feature – The bottom floor is at or above ground level (grade) on at least one side. *

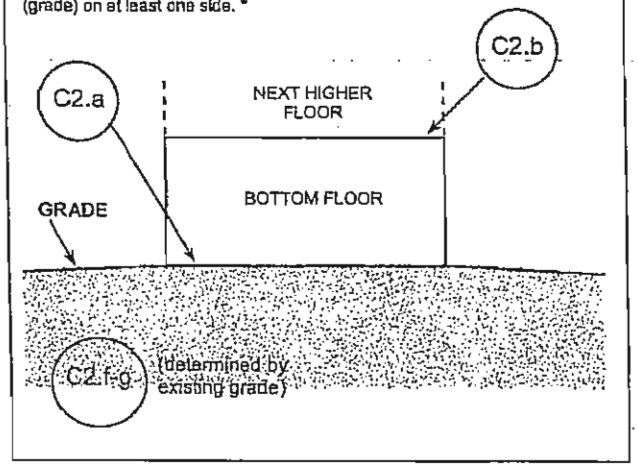

DIAGRAM 2

All single- and multiple-floor buildings with basement (other than split-level) and high-rise buildings with basement, either detached or row type (e.g., townhouses); with or without attached garage.

Distinguishing Feature – The bottom floor (basement or underground garage) is below ground level (grade) on all sides. Buildings constructed above crawl spaces that are below grade on all sides should also use this diagram.*

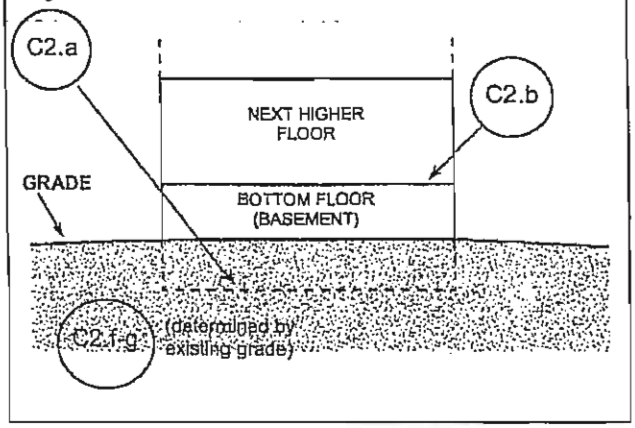

DIAGRAM 3

All split-level buildings that are slab-on-grade, either detached or row type (e.g., townhouses); with or without attached garage.

Distinguishing Feature – The bottom floor (excluding garage) is at or above ground level (grade) on at least one side .*

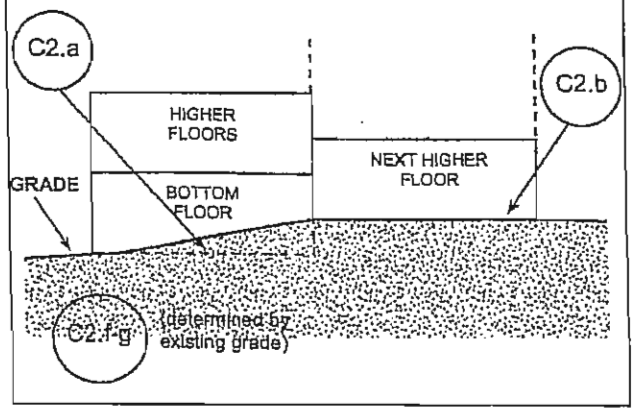

DIAGRAM 4

All split-level buildings (other than slab-on-grade), either detached or row type (e.g., townhouses); with or without attached garage.

Distinguishing Feature – The bottom floor (basement or underground garage) is below ground level (grade) on all sides. Buildings constructed above crawl spaces that are below grade on all sides should also use this diagram. *

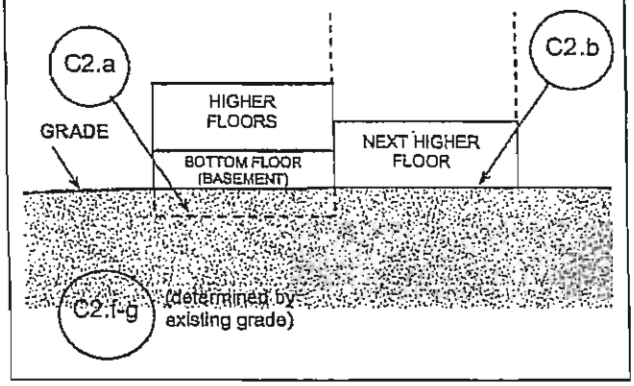

* A floor that is below ground level (grade) on all sides is considered a basement even if the floor is used for living purposes, or as an office, garage, workshop, etc.

DIAGRAM 5

All buildings elevated on piers, posts, piles, columns, or parallel shear walls. No obstructions below the elevated floor.

Distinguishing Feature – For all zones, the area below the elevated floor is open, with no obstruction to flow of flood waters (open lattice work and/or readily removable insect screening is permissible).

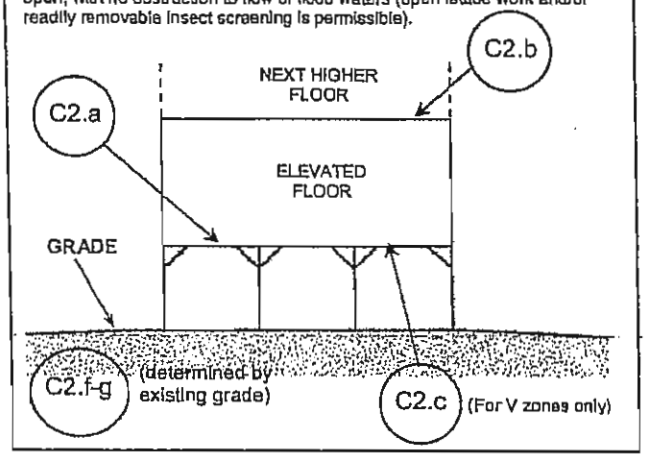

DIAGRAM 6

All buildings elevated on piers, posts, piles, columns, or parallel shear walls with full or partial enclosure below the elevated floor.

Distinguishing Feature – For all zones, the area below the elevated floor is enclosed, either partially or fully. In A Zones, the partially or fully enclosed area below the elevated floor is with or without openings** present in the walls of the enclosure. Indicate information about enclosure size and openings in Section A – Property Information.

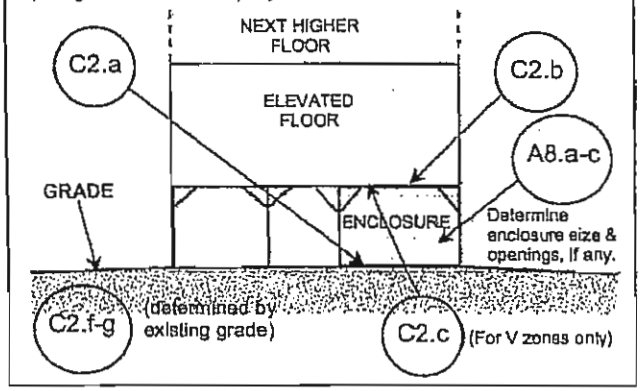

DIAGRAM 7

All buildings elevated on full-story foundation walls with a partially or fully enclosed area below the elevated floor. This includes walkout levels, where at least one side is at or above grade. The principal use of this building is located in the elevated floors of the building.

Distinguishing Feature – For all zones, the area below the elevated floor is enclosed, either partially or fully. In A Zones, the partially or fully enclosed area below the elevated floor is with or without openings** present in the walls of the enclosure. Indicate information about enclosure size and openings in Section A – Property Information.

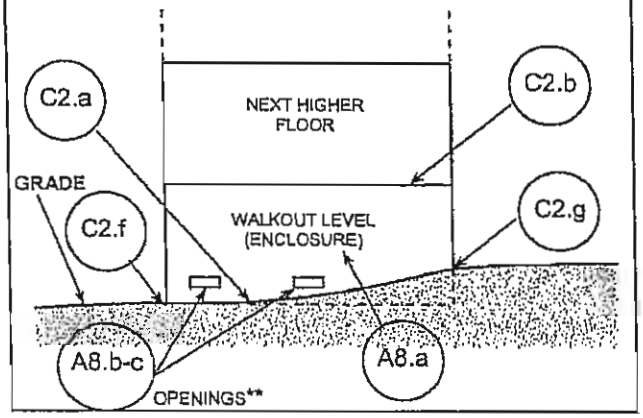

DIAGRAM 8

All buildings elevated on a crawl space with the floor of the crawl space at or above grade on at least one side, with or without an attached garage.

Distinguishing Feature – For all zones, the area below the first floor is enclosed by solid or partial perimeter walls. In all A zones, the crawl space is with or without openings** present in the walls of the crawl space. Indicate information about crawl space size and openings in Section A – Property Information.

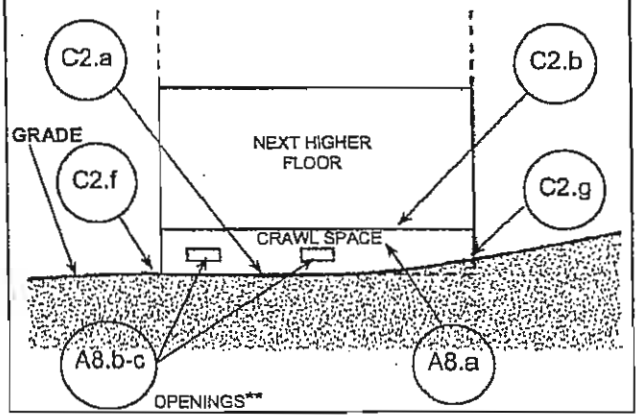

** An "opening" is defined as a permanent opening in a wall that allows for the free passage of water automatically in both directions without human intervention. Under the NFIP, a minimum of two openings is required for enclosures or crawl spaces with a total net area of not less than one square inch for every square foot of area enclosed. Each opening must be on different sides of the enclosed area. If a building has more than one enclosed area, each area must have openings on exterior walls to allow floodwater to directly enter. The bottom of the openings must be no higher than one foot above the grade underneath the flood vents. Alternatively, you may submit a certification by a registered professional engineer or architect that the design will allow for the automatic equalization of hydrostatic flood forces on exterior walls. A window, a door, or a garage door is not considered an opening.

U.S. DEPARTMENT OF HOMELAND SECURITY
FEDERAL EMERGENCY MANAGEMENT AGENCY
National Flood Insurance Program

O.M.B. NO. 1660-0008
Expires February 28, 2009

FLOODPROOFING CERTIFICATE

FOR NON-RESIDENTIAL STRUCTURES

The floodproofing of non-residential buildings may be permitted as an alternative to elevating to or above the Base Flood Elevation; however, a floodproofing design certification is required. This form is to be used for that certification. Floodproofing of a residential building does not alter a community's floodplain management elevation requirements or affect the insurance rating unless the community has been issued an exception by FEMA to allow floodproofed residential basements. The permitting of a floodproofed residential basement requires a separate certification specifying that the design complies with the local floodplain management ordinance.

FOR INSURANCE COMPANY USE
POLICY NUMBER
COMPANY NAIC NUMBER

BUILDING OWNER'S NAME

STREET ADDRESS (Including Apt., Unit, Suite, and/or Bldg. Number) OR P.O. ROUTE AND BOX NUMBER

OTHER DESCRIPTION (Lot and Block Numbers, etc.)

CITY | STATE | ZIP CODE

SECTION I FLOOD INSURANCE RATE MAP (FIRM) INFORMATION

Provide the following from the proper FIRM:

COMMUNITY NUMBER	PANEL NUMBER	SUFFIX	DATE OF FIRM INDEX	FIRM ZONE	BASE FLOOD ELEVATION (In AO Zones, Use Depth)

SECTION II FLOODPROOFING INFORMATION (By a Registered Professional Engineer or Architect)

Floodproofing Design Elevation Information:

Building is floodproofed to an elevation of ..... feet NGVD. (Elevation datum used must be the same as that on the FIRM.)

Height of floodproofing on the building above the lowest adjacent grade is ..... feet.

(NOTE: for insurance rating purposes, the building's floodproofed design elevation must be at least one foot above the Base Flood Elevation to receive rating credit. If the building is floodproofed only to the Base Flood Elevation, then the building's insurance rating will result in a higher premium.)

SECTION III CERTIFICATION (By Registered Professional Engineer or Architect)

Non-Residential Floodproofed Construction Certification:

I certify that, based upon development and/or review of structural design, specifications, and plans for construction, the design and methods of construction are in accordance with accepted standards of practice for meeting the following provisions:

The structure, together with attendant utilities and sanitary facilities, is watertight to the floodproofed design elevation indicated above, with walls that are substantially impermeable to the passage of water.

All structural components are capable of resisting hydrostatic and hydrodynamic flood forces, including the effects of buoyancy, and anticipated debris impact forces.

I certify that the information on this certificate represents my best efforts to interpret the data available. I understand that any false statement may be punishable by fine or imprisonment under 18 U.S. Code, Section 1001.

CERTIFIER'S NAME | LICENSE NUMBER (or Affix Seal)

TITLE | COMPANY NAME

ADDRESS | CITY | STATE | ZIP CODE

SIGNATURE | DATE | PHONE

Copies should be made of this Certificate for: 1) community official, 2) insurance agent/company, and 3) building owner.

Appendix (3)

APPENDIX 6 MINIMUM STANDARDS FOR ROADWAY WIDTHS, SHOULDERS AND DITCHES

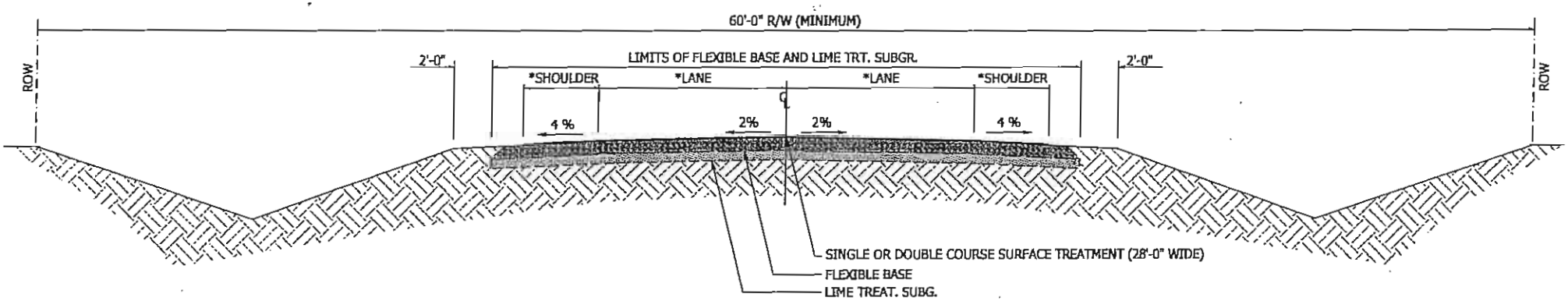

NOTES:

1.) *ORDINARY COUNTY ROADS - (2) 10'-0" LANES AND (2) 2'-0" SHOULDERS
2.) *ARTERIAL ROADS - (2) 11'-0" LANES AND (2) 4'-0" SHOULDERS WITH ONE COURSE SURFACE TREATMENT (OCST)
3.) *THOROUGHFARE ROADS - (2) 12'-0" LANES AND (2) 6'-0" SHOULDERS WITH ONE COURSE SURFACE TREATMENT (OCST)
4.) ALL PAVEMENT DESIGN SHALL BE PERFORMED UTILIZING SOIL TESTS TO DETERMINE THE EXISTING SOIL STRENGTH. THE PAVEMENT DESIGN SHALL BE PERFORMED IN ACCORDANCE WITH THE GENERAL TYPICAL SECTION GUIDELINES FOR VARIOUS ROADWAYS AS INDICATED IN THE APPENDICES'. THE PAVEMENT DESIGN SHALL BE SUBMITTED TO THE COUNTY ENGINEERING DEPARTMENT WITH THE ROAD CONSTRUCTION PLANS, SIGNED AND SEALED BY A REGISTERED PROFESSIONAL ENGINEER FOR APPROVAL.

TYPICAL SURFACE TREATMENT SECTION

N.T.S.

REFERENCE 6.7, PAGE 18

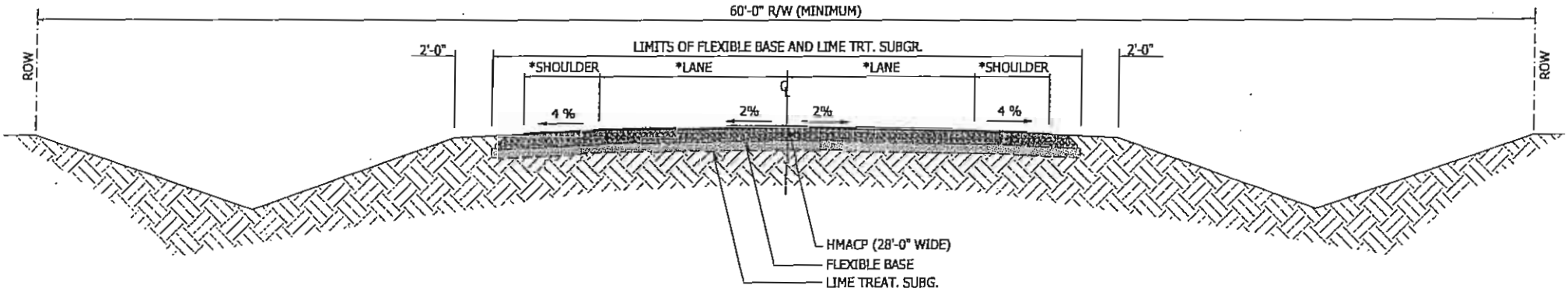

NOTES:

1.) *ORDINARY COUNTY ROADS - (2) 10'-0" LANES AND (2) 2'-0" SHOULDERS
2.) *ARTERIAL ROADS - (2) 11'-0" LANES AND (2) 4'-0" SHOULDERS WITH ONE COURSE SURFACE TREATMENT (OCST)
3.) *THOROUGHFARE ROADS - (2) 12'-0" LANES AND (2) 6'-0" SHOULDERS WITH ONE ONE COURSE SURFACE TREATMENT (OCST)
4.) ALL PAVEMENT DESIGN SHALL BE PERFORMED UTILIZING SOIL TESTS TO DETERMINE THE EXISTING SOIL STRENGTH. THE PAVEMENT DESIGN SHALL BE PERFORMED IN ACCORDANCE WITH THE GENERAL TYPICAL SECTION GUIDELINES FOR VARIOUS ROADWAYS AS INDICATED IN THE APPENDICES'. THE PAVEMENT DESIGN SHALL BE SUBMITTED TO THE COUNTY ENGINEERING DEPARTMENT WITH THE ROAD CONSTRUCTION PLANS, SIGNED AND SEALED BY A REGISTERED PROFESSIONAL ENGINEER FOR APPROVAL.

TYPICAL HOT MIX ASPHALTIC CONCRETE PAVEMENT SECTION

N.T.S.

REFERENCE 6.7, PAGE 18

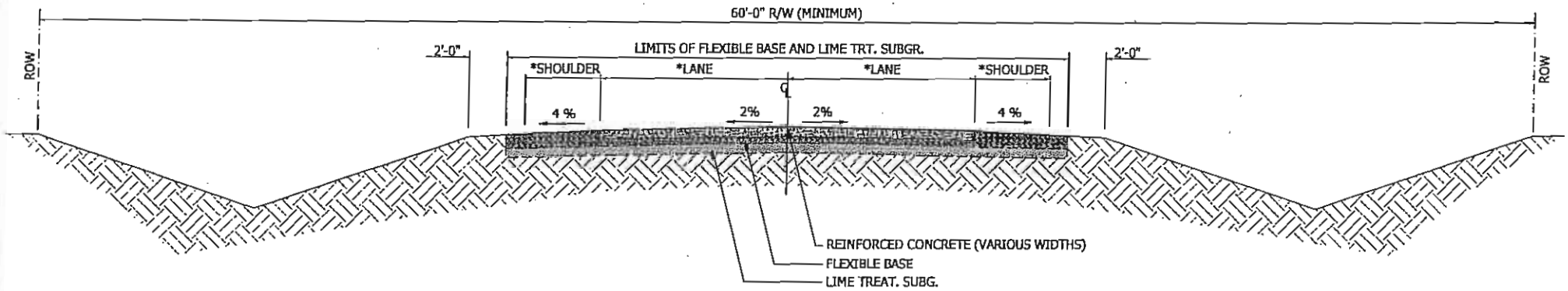

NOTES:

1.) *ORDINARY COUNTY ROADS - (2) 10'-0" LANES AND (2) 2'-0" SHOULDERS
2.) *ARTERIAL ROADS - (2) 11'-0" LANES AND (2) 4'-0" SHOULDERS WITH ONE COURSE SURFACE TREATMENT (OCST)
3.) *THOROUGHFARE ROADS - (2) 12'-0" LANES AND (2) 6'-0" SHOULDERS WITH ONE COURSE SURFACE TREATMENT (OCST)
4.) ALL PAVEMENT DESIGN SHALL BE PERFORMED UTILIZING SOIL TESTS TO DETERMINE THE EXISTING SOIL STRENGTH. THE PAVEMENT DESIGN SHALL BE PERFORMED IN ACCORDANCE WITH THE GENERAL TYPICAL SECTION GUIDELINES FOR VARIOUS ROADWAYS AS INDICATED IN THE APPENDICES'. THE PAVEMENT DESIGN SHALL BE SUBMITTED TO THE COUNTY ENGINEERING DEPARTMENT WITH THE ROAD CONSTRUCTION PLANS, SIGNED AND SEALED BY A REGISTERED PROFESSIONAL ENGINEER FOR APPROVAL.

TYPICAL CONCRETE PAVEMENT SECTION

N.T.S.

REFERENCE 6.7, PAGE 18